YAMAHA

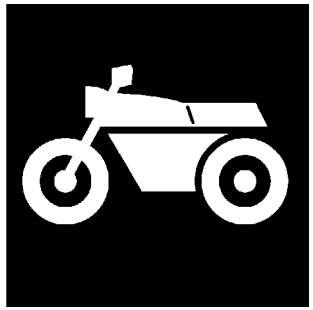

PARTS CATALOGUE

TT-R50EB (1P6U) U.S.A.

1L1P6-110E1

( )

YAMAHA GENUINE Parts & Accessories

TT-R50E
PARTS CATALOGUE
©2011 by Yamaha Motor Co., Ltd.
1st edition, July 2011
All rights reserved.
Any reprinting or unauthorized use
without the written permission of
Yamaha Motor Co., Ltd.
is expressly prohibited.
Printed in Japan.

FOREWORD

This Parts Catalogue is related to the parts for the model(s) on the cover page. When you are ordering replacement parts, please refer to this Parts Catalogue and quote both part numbers and part names correctly.

1. Modifications or additions which have been made after the issue of the Parts Catalogue will be announced in the Parts News.
   It is advisable that you make the necessary corrections to the Parts Catalogue according to the Parts News.

2. Abbreviations
   The following abbreviations are used in this Parts Catalogue.

   “UR” Use specified parts number.
   “UN” Use as many as needed.
   “AP” Alternate Parts
   “LM” Locally Made (Parts need to be ordered locally)
   “F#” Frame No. (Applicable machine No.)
   “O/S” Over Size

3. The number of components for assembly
   - Parts, which are to be supplied in an assembly, are listed with a dot (.) in front of the part name as shown below.
   - The numeral appearing to the right of each component part indicates the quantity of parts for each assembly unit.

PART NO.	DESCRIPTION	Q’TY	REMARKS
2F5–83310–60	FRONT FLASHER LIGHT ASSY	2	
115–83311–60	.BULB (6V–18W)	1	

4. Applicable colours of graphics are represented in the “REMARKS” as shown below.

PART NO.	DESCRIPTION	Q’TY	REMARKS
2N4–24110–00–X5	FUEL TANK COMP.	2	MXR
3J1–24240–10	.GRAPHIC, FUEL TANK	1	FOR MXR

5. Note that the illustrations for reference in finding parts numbers are not to be used for assembling. When assembling, please use the applicable service manual.

6. The asterisk (*) before a reference number indicates modified items after the first edition.

7. Applicable Serial No.

Engine Serial No.

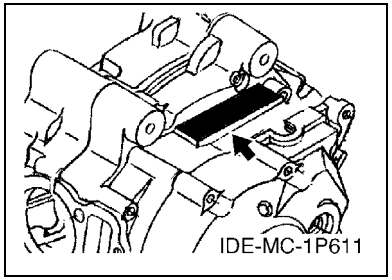

Frame Serial No.

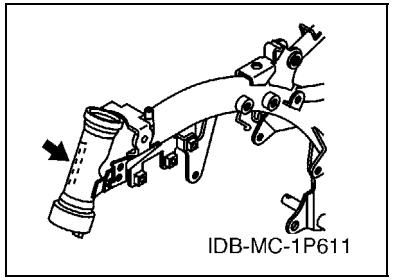

8. Applicable Colour Code (The (*) mark shows Model colour.)

Abbreviation	Colour Name	Colour Code
DPBSE(*)	DEEP PURPLISH BLUE SOLID E	0583

MODEL LABEL

(1) A label called “Model Label” is affixed in the location as indicated in (3) below. When using this parts catalogue, please be sure to cross–reference the “model code – production code No.” in the catalogue with the “model code – production code No.” indicated on the Model Label affixed onto the product concerned.

(2) “Model Label” Indication

a b ○ xxxx – xxx ● x c	a: Model Type Code b: Production Code No. c: Colouring Type

○ 4TW1–010 ● A

(3) Model Label Affixing Location

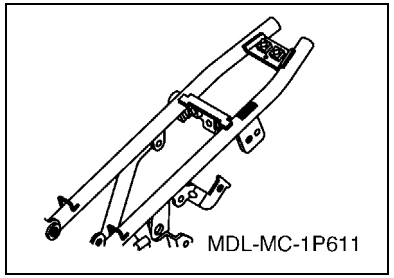

(4) Colouring Information

Model Code	Colouring Type Code	Colour Code	Colour Name	Abbreviation
1P6U	A	0583	DEEP PURPLISH BLUE SOLID E	DPBSE

(5) Model Code – Production Code Number of Model Listed in This Parts Catalogue

Model Code	Production Code No.	Country (destination)	Model Code	Production Code No.	Country (destination)
1P6U	010	U.S.A.			

CONTENTS

ENGINE

CYLINDER HEAD 1
CRANKSHAFT & PISTON 2
VALVE 3
CAMSHAFT & CHAIN 4
OIL PUMP 5
INTAKE 6
CARBURETOR 7
EXHAUST 9
CRANKCASE 10
CRANKCASE COVER 1 11
STARTER 13
CLUTCH 14
TRANSMISSION 15
SHIFT CAM & FORK 16
SHIFT SHAFT 17

CHASSIS

FRAME 18
FENDER 19
SIDE COVER 20
REAR ARM & SUSPENSION 21
STEERING 22
FRONT FORK 23
FUEL TANK 24
SEAT 25
FRONT WHEEL 26
REAR WHEEL 27
STEERING HANDLE & CABLE 29
STAND & FOOTREST 30
GENERATOR 31
STARTING MOTOR 32
HANDLE SWITCH & LEVER 33
ELECTRICAL 1 34

INDEX

NUMERICAL INDEX 35

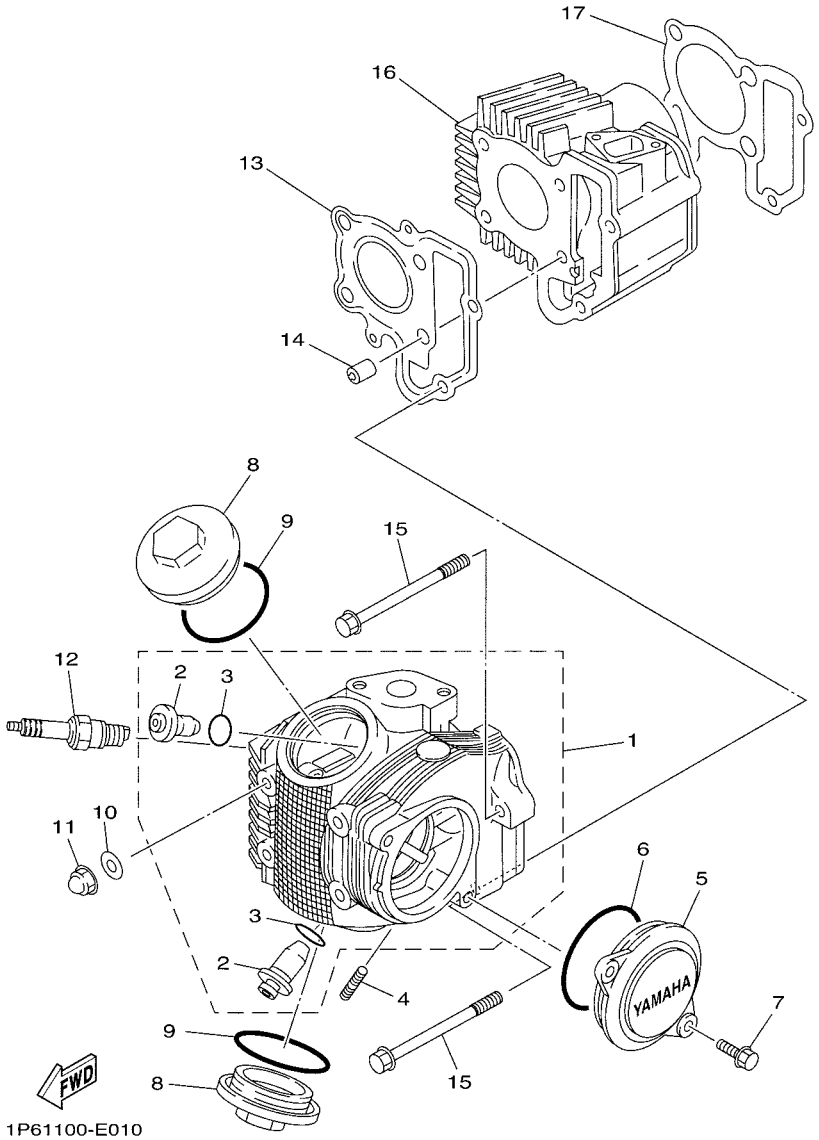

FIG. 1 CYLINDER HEAD

REF. NO.	PART NO.	DESCRIPTION	1P6U					REMARKS
1	1P6–W1102–00	CYLINDER HEAD ASSY	1					
2	4GL–11134–10	.GUIDE, VALVE 2	2					
3	93210–09802	.O-RING	2					
4	1P6–14651–00	BOLT	2					
5	1P6–E1185–00	COVER, CYLINDER HEAD SIDE 3	1					
6	93210–628B6	O-RING	1					
7	95027–06016	BOLT, FLANGE	2					
8	1P6–E1186–00	COVER, CYLINDER HEAD SIDE 2	2					
9	93210–44889	O-RING	2					
10	90201–088C3	WASHER, PLATE	4					
11	90176–08026	NUT, CROWN	4					
12	94701–00878	PLUG, SPARK (NGK CR7HSA)	1					
13	1P6–E1181–00	GASKET, CYLINDER HEAD 1	1					
14	99530–10114	PIN, DOWEL	2					
15	95027–06085	BOLT, FLANGE	2					
16	1P6–E1311–10	CYLINDER 1	1					
17	1P6–E1351–00	GASKET, CYLINDER	1					

FIG. 2 CRANKSHAFT & PISTON

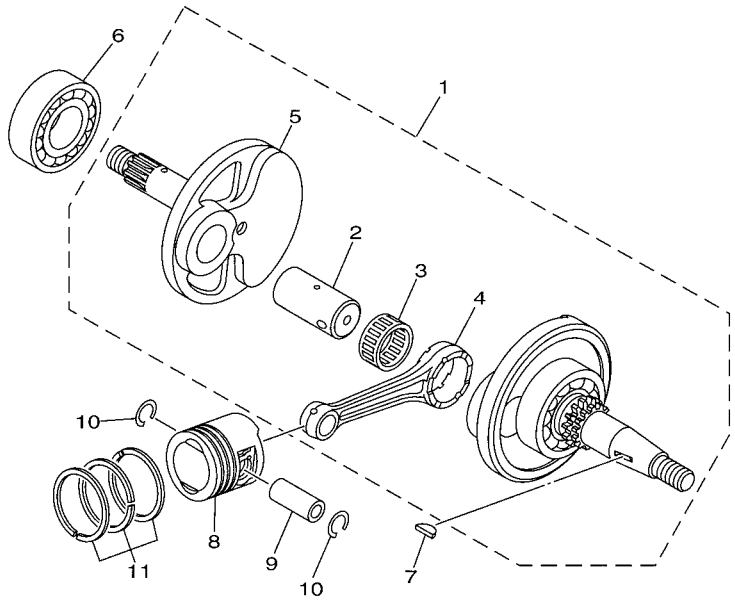

1P61100-E020

REF. NO.	PART NO.	DESCRIPTION	1P6U					REMARKS
1	1P6–W1140–10	CRANKSHAFT ASSY	1					
2	1P6–E1681–00	.PIN, CRANK 1	1					
3	93310–3230E	.BEARING	1					
4	1P6–E1651–00	.ROD, CONNECTING	1					
5	1P6–E1422–00	.CRANK 2	1					
6	93306–205YP	BEARING	1					
7	90280–03017	KEY, WOODRUFF	1					
8	1P6–E1631–00	PISTON (STD)	1					
	5DV–11636–10	PISTON (0.50MM O/S)	1					AP
	5DV–11638–10	PISTON (1.00MM O/S)	1					AP
9	5DV–11633–00	PIN, PISTON	1					
10	1P6–E1634–00	CLIP, PISTON PIN	2					
11	1P6–Y1161–00	PISTON RING SET (STD)	1					
	5DV–11605–00	PISTON RING SET (0.50MM O/S)	1					AP
	5DV–11607–00	PISTON RING SET (1.00MM O/S)	1					AP

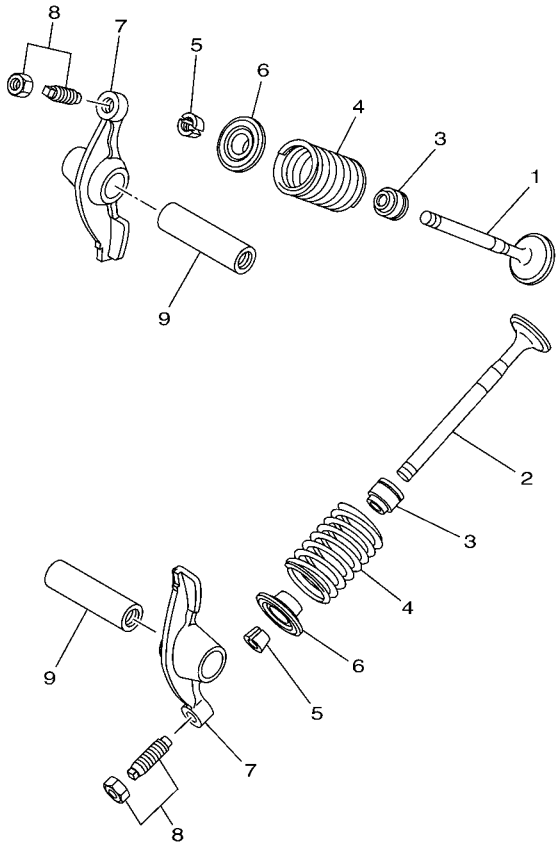

1P64100-F030

FIG. 3 VALVE

REF. NO.	PART NO.	DESCRIPTION	1P6U					REMARKS
1	1P6–E2111–00	VALVE, INTAKE	1					
2	1P6–E2121–00	VALVE, EXHAUST	1					
3	1P6–E2119–00	SEAL, VALVE STEM	2					
4	5DV–12114–01	SPRING, VALVE OUTER	2					
5	1P6–E2118–00	COTTER, VALVE	4					
6	1P6–E2117–00	RETAINER, VALVE SPRING	2					
7	5VL–E2151–00	ARM, VALVE ROCKER	2					
8	5VL–Y1215–00	SCREW, VALVE ADJUSTING	2					
9	5VL–E2156–00	SHAFT, ROCKER 2	2					

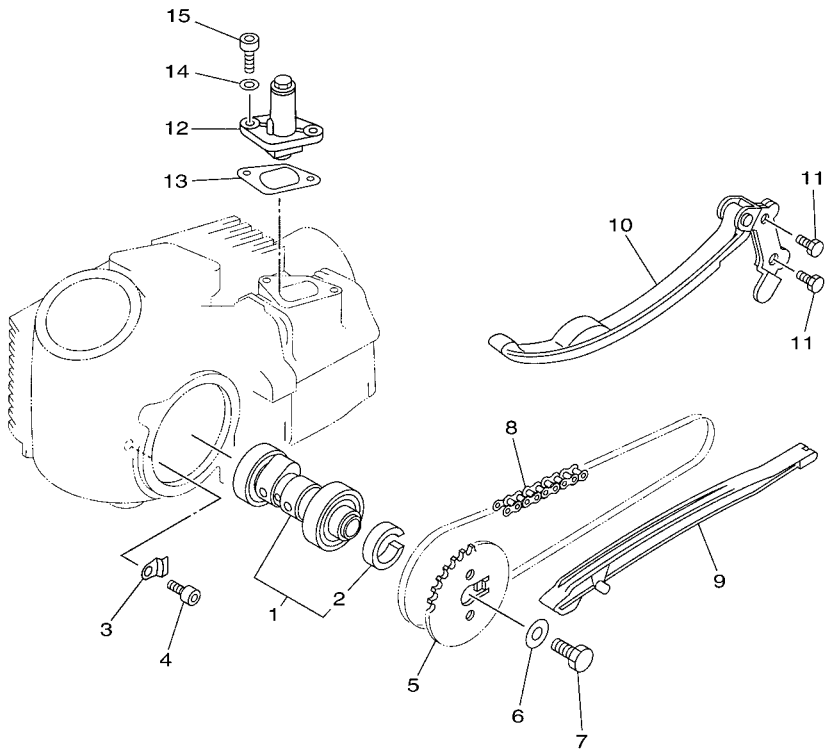

1P61100-E040

FIG. 4 CAMSHAFT & CHAIN

REF. NO.	PART NO.	DESCRIPTION	1P6U					REMARKS
1	1P6–E2170–00	CAMSHAFT ASSY 1	1					
2	90387–167L5	.COLLAR	1					
3	1P6–E111F–00	PLATE	1					
4	90110–06829	BOLT, HEXAGON SOCKET HEAD	1					
5	1P6–E2176–00	SPROCKET, CAM CHAIN	1					
6	1P6–E4617–01	WASHER	1					
7	90101–08820	BOLT	1					
8	94591–51084	CHAIN	1					
9	1P6–E2231–00	GUIDE, STOPPER 1	1					
10	1P6–E2241–00	GUIDE, STOPPER 2	1					
11	91312–06016	BOLT	2					
12	4GL–12210–00	TENSIONER ASSY, CAM CHAIN	1					
13	5VL–E2213–10	GASKET, TENSIONER CASE	1					
14	90430–06817	GASKET	2					
15	91312–06016	BOLT	2					

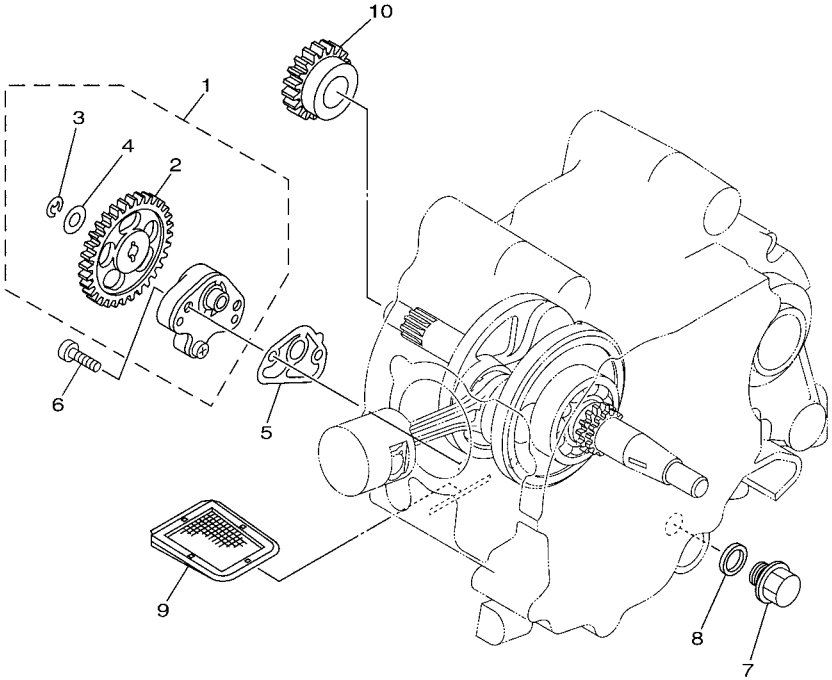

1P61100-E050

FIG. 5 OIL PUMP

REF. NO.	PART NO.	DESCRIPTION	1P6U					REMARKS
1	1P6–E3300–11	OIL PUMP ASSY	1					
2	1P6–E3325–10	.GEAR, PUMP DRIVEN	1					
3	93430–05823	.CIRCLIP	1					
4	90201–07803	.WASHER, PLATE	1					
5	5VL–E3329–00	GASKET, PUMP COVER	1					
6	90155–06801	SCREW, FLAT FILLISTER	2					
7	90340–12097	PLUG, STRAIGHT SCREW	1					
8	90430–12227	GASKET	1					
9	1P6–E3411–00	STRAINER, OIL	1					
10	1P6–E3324–00	GEAR, PUMP DRIVE	1					

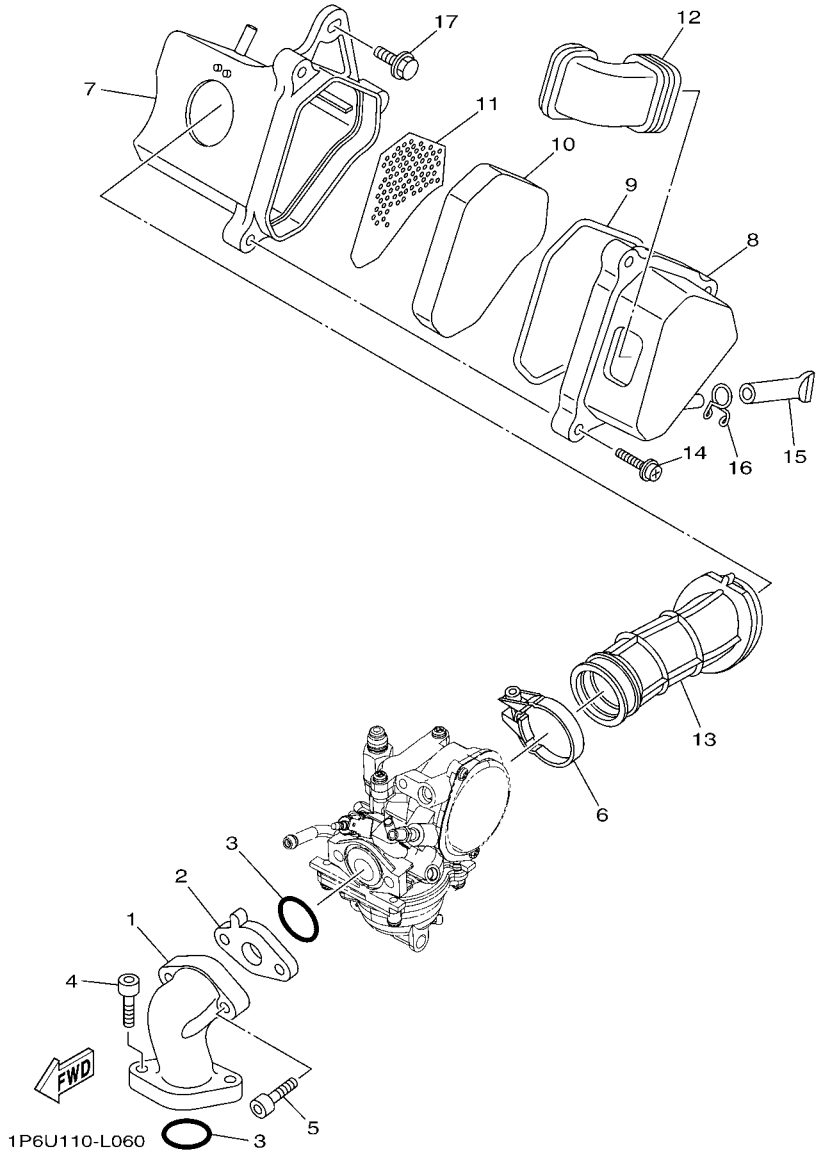

FIG. 6 INTAKE

REF. NO.	PART NO.	DESCRIPTION	1P6U					REMARKS
1	1P6–E3586–10	JOINT, CARBURETOR 1	1					
2	1P6–E3595–00	JOINT	1					
3	93210–22803	O-RING	2					
4	91317–06020	BOLT	2					
5	91317–06030	BOLT	2					
6	1P6–E3575–01	BAND	1					
7	1P6–E4411–01	CASE, AIR CLEANER 1	1					
8	1P6–E4412–00	CAP, CLEANER CASE 1	1					
9	1P6–E4452–00	SEAL	1					
10	1P6–E4451–00	ELEMENT, AIR CLEANER	1					
11	1P6–E4472–00	PLATE, ELEMENT	1					
12	1P6–E4437–00	DUCT	1					
13	1P6–E4453–10	JOINT, AIR CLEANER 1	1					
14	97602–05225	SCREW, PAN HEAD WITH WASHER	3					
15	4FP–E443E–00	PIPE, DRAIN	1					
16	90467–10008	CLIP	1					
17	90119–06044	BOLT, WITH WASHER	1					

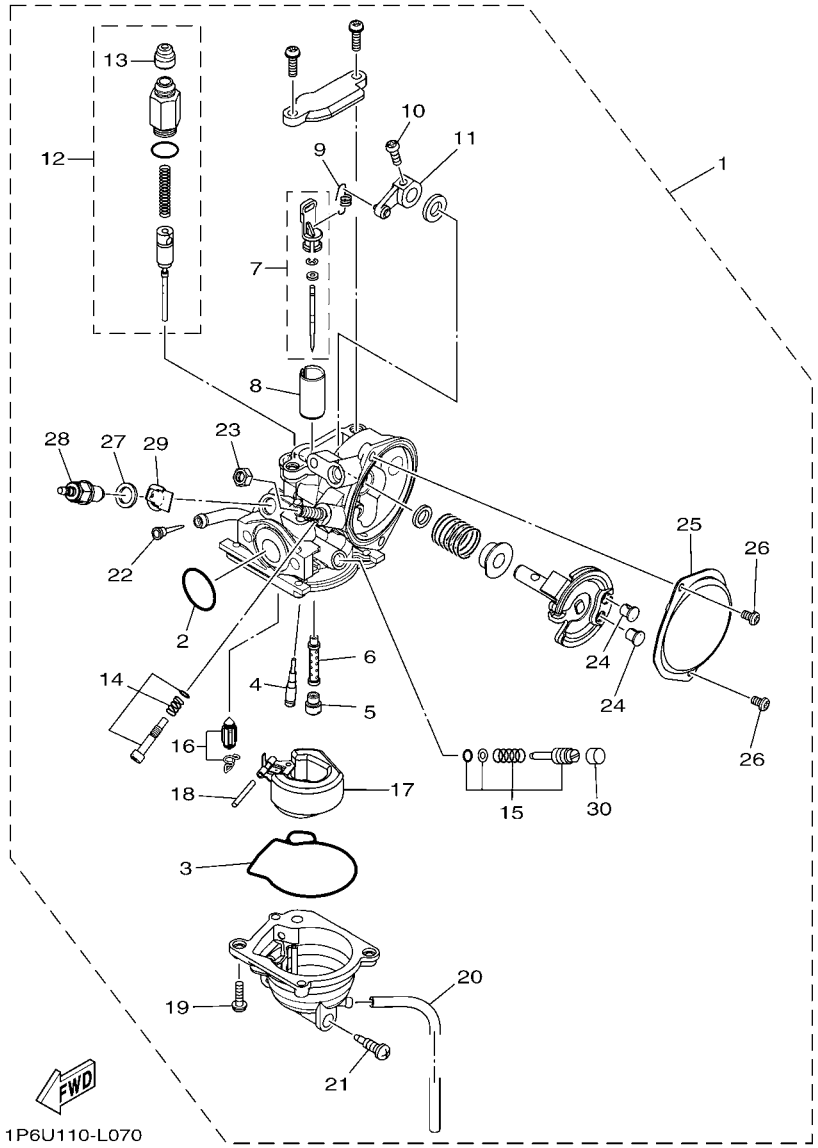

FIG. 7 CARBURETOR

REF. NO.	PART NO.	DESCRIPTION	1P6U					REMARKS
1	1P6–E4101–20	CARBURETOR ASSY 1	1					
2	68V–8182L–00	.O-RING 1	1					
3	1P6–14147–00	.O-RING	1					
4	1P6–14142–12	.JET, PILOT (# 12.5)	1					
5	18A–1414A–63	.JET, MAIN (# 62.5)	1					
6	1P6–14141–12	.NOZZLE, MAIN	1					
7	1P6–1490J–10	.NEEDLE SET	1					
8	1P6–1411F–25	.VALVE, THROTTLE 2	1					
9	1P6–14935–00	.SPRING	1					
10	1B2–14216–00	.SCREW	1					
11	1P6–14905–00	.LEVER ASSY	1					
12	1P6–1410A–10	.STARTER SET	1					
13	22F–14173–00	..COVER, PLUNGER CAP	1					
14	1B2–14103–00	.THROTTLE SCREW SET	1					
15	1P6–14104–00	.AIR SCREW SET	1					
16	1P6–14107–20	.NEEDLE VALVE SET	1					
17	1P6–14185–00	.FLOAT	1					
18	53L–14186–00	.PIN, FLOAT	1					
19	97607–04114	.SCREW,WITH WASHER	6					
20	1P6–14196–00	.PIPE, OVER FLOW 1	2					
21	5LW–14191–00	.PLUG, DRAIN	1					
22	5LW–14994–00	.NET, FILTER	1					
23	522–14161–00	.NUT, CABLE ADJUSTING	1					
24	1UY–14155–00	.GUIDE, CABLE	2					
25	1P6–14293–00	.COVER 1	1					
26	98507–04006	.SCREW, PAN HEAD	2					
27	5CY–14951–00	.WASHER	1					

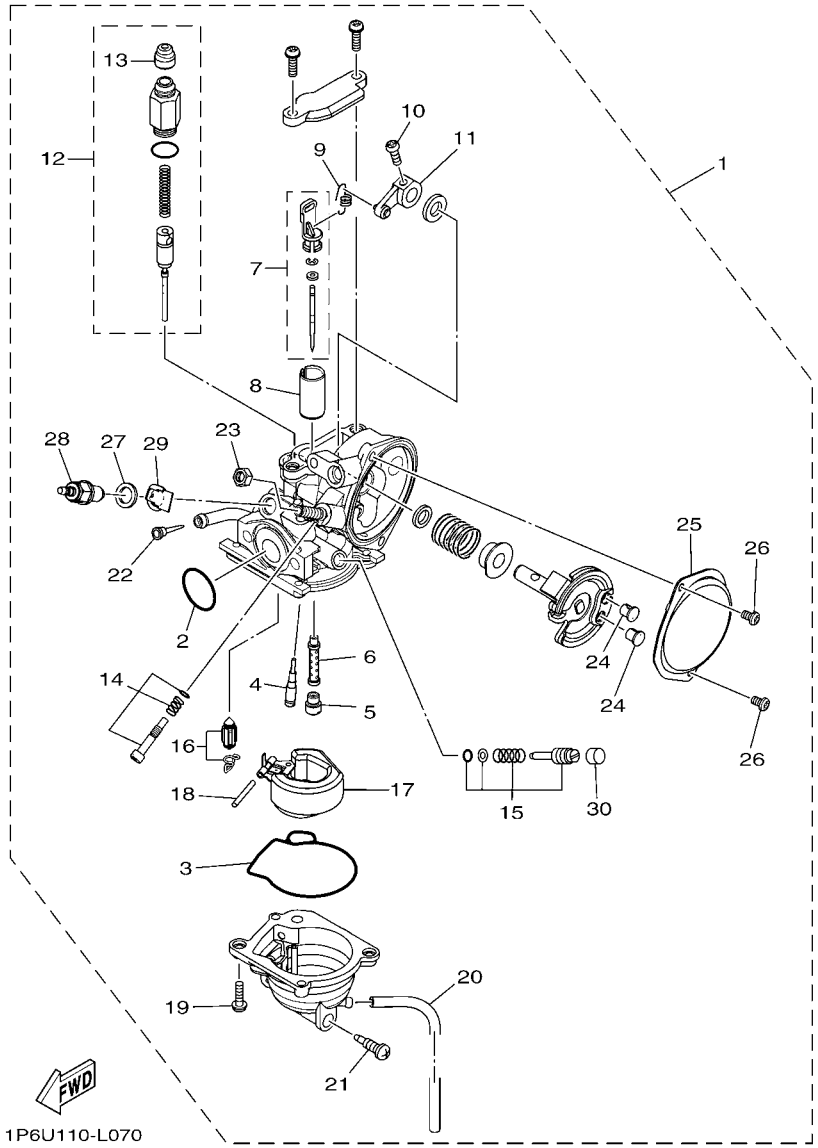

FIG. 7 CARBURETOR

REF. NO.	PART NO.	DESCRIPTION	1P6U					REMARKS
28	5FU–83790–00	.HEATER ASSY (15W)	1					
29	5FU–82103–00	.TERMINAL 1	1					
30	3F9–14118–00	.CAP	1					

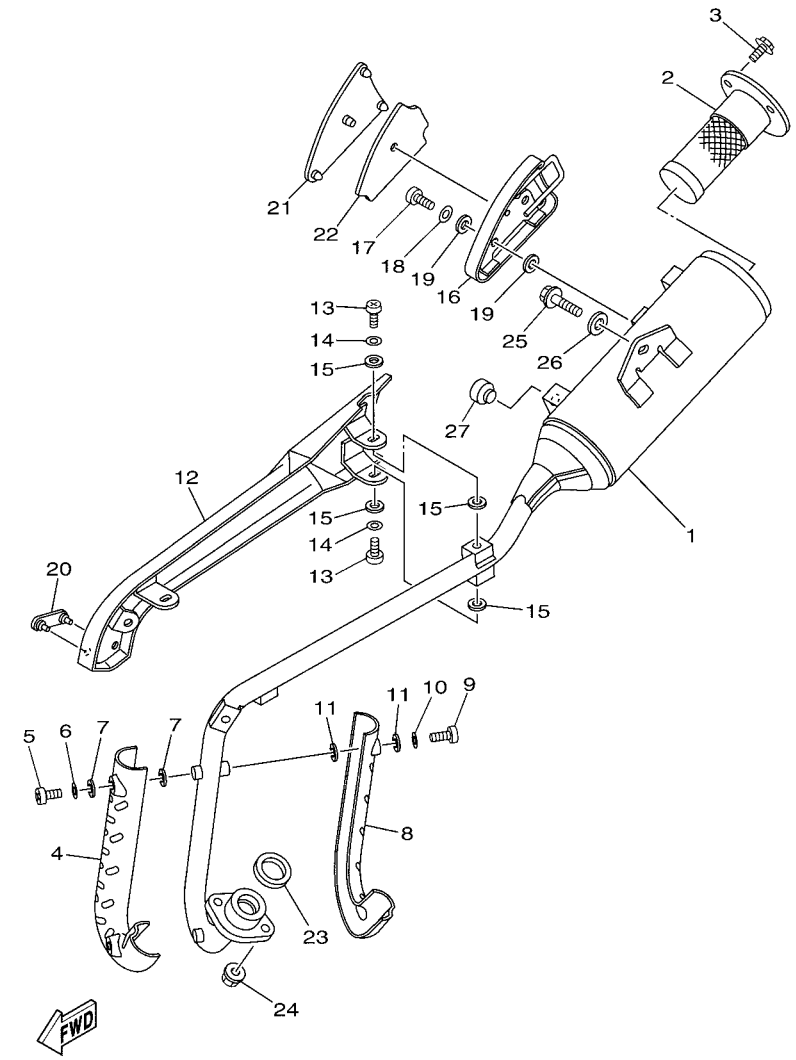

1P61100-E080

FIG. 8 EXHAUST

REF. NO.	PART NO.	DESCRIPTION	1P6U					REMARKS
1	1P6–E4711–00	MUFFLER 1	1					
2	1P6–14780–00	SPARK ARRESTER ASSY	1					
3	95027–06010	BOLT, FLANGE	3					
4	1P6–E4718–00	PROTECTOR, MUFFLER 1	1					
5	98507–05008	SCREW, PAN HEAD	2					
6	92907–05600	WASHER, PLATE	2					
7	1P6–E4766–00	WASHER, PROTECTOR	4					
8	1P6–E4728–00	PROTECTOR, MUFFLER 2	1					
9	98507–05008	SCREW, PAN HEAD	2					
10	92907–05600	WASHER, PLATE	2					
11	1P6–E4766–00	WASHER, PROTECTOR	4					
12	1P6–E4738–00	PROTECTOR, MUFFLER 3	1					
13	98507–06010	SCREW, PAN HEAD	4					
14	92907–06600	WASHER, PLATE	4					
15	90201–05809	WASHER, PLATE	8					
16	1P6–E4758–00	PROTECTOR, SILENCER	1					
17	98507–06010	SCREW, PAN HEAD	2					
18	92907–06600	WASHER, PLATE	2					
19	90201–05809	WASHER, PLATE	4					
20	1P6–E479H–00	COVER, 1	1					
21	1P6–E479J–00	COVER 2	1					
22	1P6–E4733–00	MAT 1	1					
23	1P6–E4613–00	GASKET, EXHAUST PIPE	1					
24	95702–06500	NUT, FLANGE	2					
25	95812–08030	BOLT, FLANGE	1					
26	1P6–E4617–01	WASHER	1					
27	22W–24181–00	DAMPER, LOCATING 1	1					

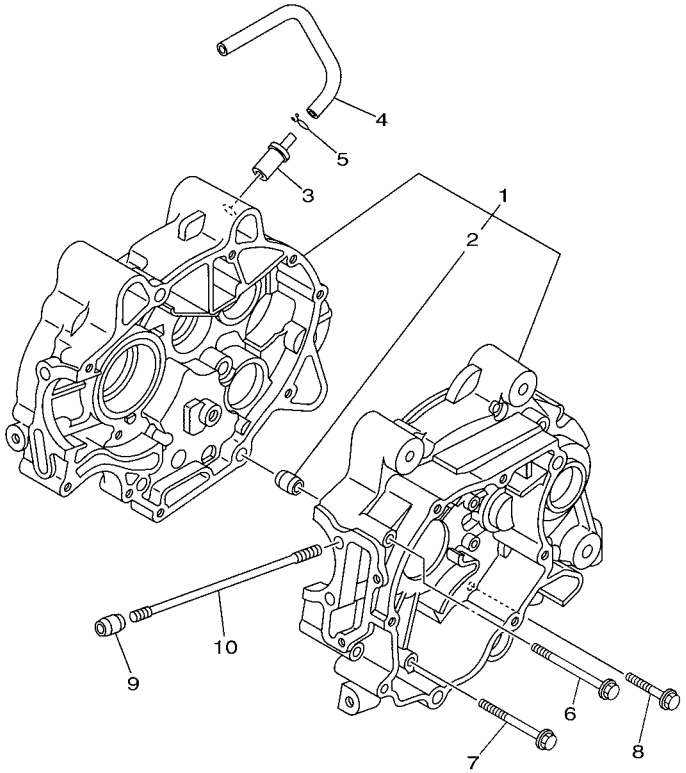

1P61100-E090

FIG. 9 CRANKCASE

REF. NO.	PART NO.	DESCRIPTION	1P6U					REMARKS
1	1P6–E5100–10	CRANKCASE ASSY	1					
2	99530–10114	.PIN, DOWEL	2					
3	1P6–E5371–10	BREATHER	1					
4	1P6–E531A–00	HOSE, BREATHER 1	1					
5	90467–09854	CLIP	2					
6	90105–065A1	BOLT, FLANGE	1					
7	95027–06060	BOLT, FLANGE	2					
8	95027–06040	BOLT, FLANGE	7					
9	99530–10114	PIN, DOWEL	2					
10	90116–08809	BOLT, STUD	4					

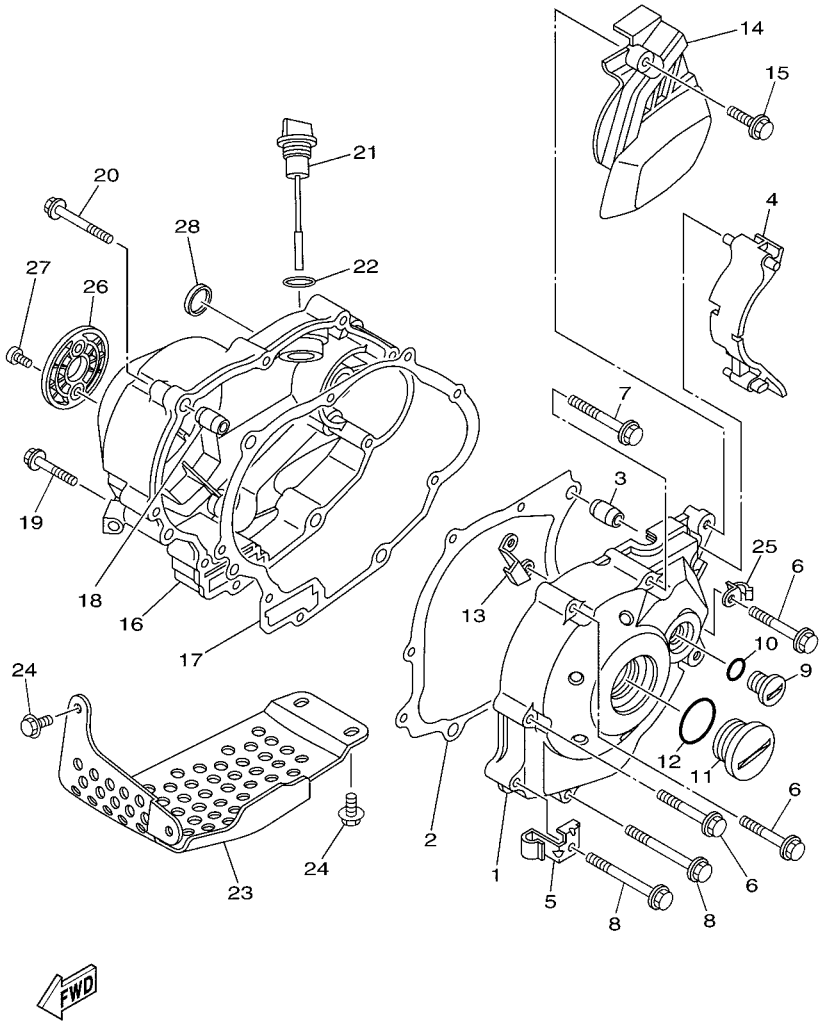

1P61100-E100

FIG. 10 CRANKCASE COVER 1

REF. NO.	PART NO.	DESCRIPTION	1P6U					REMARKS
1	1P6–E5411–10	COVER, CRANKCASE 1	1					
2	1P6–E5451–00	GASKET, CRANKCASE COVER 1	1					
3	99530–10114	PIN, DOWEL	2					
4	1P6–E7466–00	GUIDE, CHAIN	1					
5	1P6–E5484–01	CLAMP 2	1					
6	95027–06040	BOLT, FLANGE	4					
7	95027–06050	BOLT, FLANGE	2					
8	90105–065A1	BOLT, FLANGE	2					
9	90340–14818	PLUG, STRAIGHT SCREW	1					
10	93210–14899	O-RING	1					
11	90340–32813	PLUG, STRAIGHT SCREW	1					
12	93210–328A4	O-RING	1					
13	1P6–E5113–00	PLATE	1					
14	1P6–E5418–00	COVER, CHAIN CASE	1					
15	95022–06025	BOLT, FLANGE	2					
16	1P6–E5421–10	COVER, CRANKCASE 2	1					
17	1P6–E5461–00	GASKET, CRANKCASE COVER 2	1					
18	99530–10114	PIN, DOWEL	2					
19	95027–06040	BOLT, FLANGE	3					
20	95027–06050	BOLT, FLANGE	6					
21	1P6–E5362–00	PLUG, OIL LEVEL	1					
22	93210–19809	O-RING	1					
23	1P6–E5436–01	COVER, STARTING MOTOR	1					
24	95822–08016	BOLT, FLANGE	2					
25	90465–08803	CLAMP	1					
26	1P6–E5431–00	COVER, CRANKCASE 3	1					
27	98507–05008	SCREW, PAN HEAD	2					

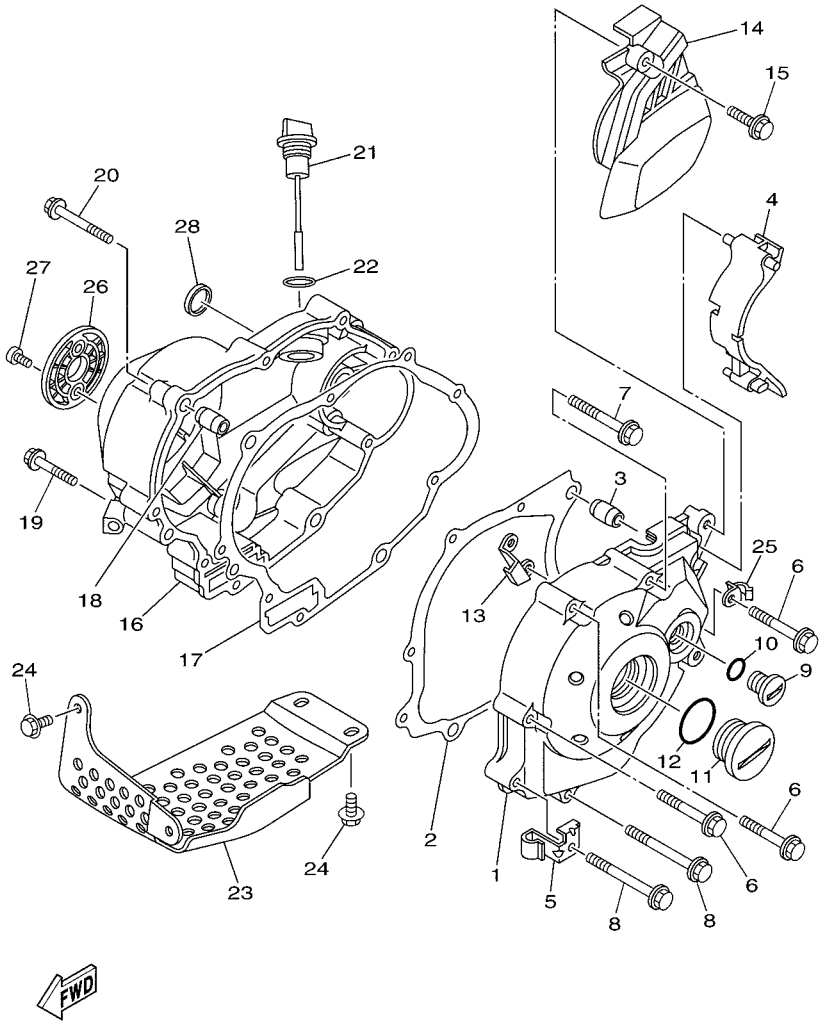

1P61100-E100

FIG. 10 CRANKCASE COVER 1

REF. NO.	PART NO.	DESCRIPTION	1P6U					REMARKS
28	90338–26802	PLUG	1					

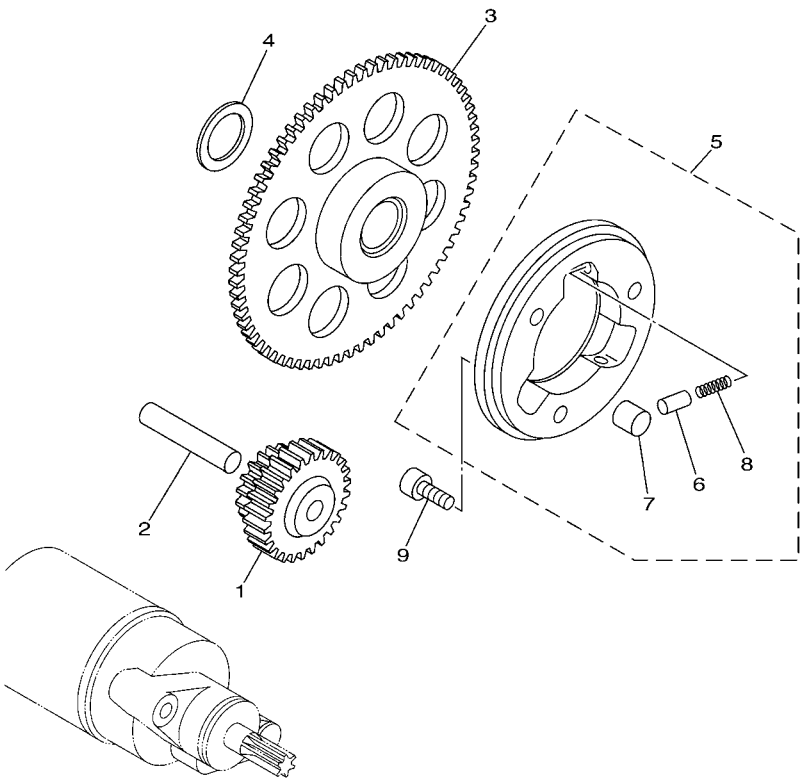

5HNE100-B120

FIG. 11 STARTER

REF. NO.	PART NO.	DESCRIPTION	1P6U					REMARKS
1	1P6–E5512–10	GEAR, IDLER 1	1					
2	93608–43800	PIN, DOWEL	1					
3	4ST–15524–00	WHEEL, STARTER (77T)	1					
4	1P6–E5644–00	SHIM	1					
5	3AY–15580–01	STARTER CLUTCH OUTER ASSY	1					
6	3AY–15583–00	.CAP, STARTER CLUTCH SPRING	3					
7	93610–10174	.PIN, DOWEL	3					
8	90501–02639	.SPRING, COMPRESSION	3					
9	91312–06012	BOLT	3					

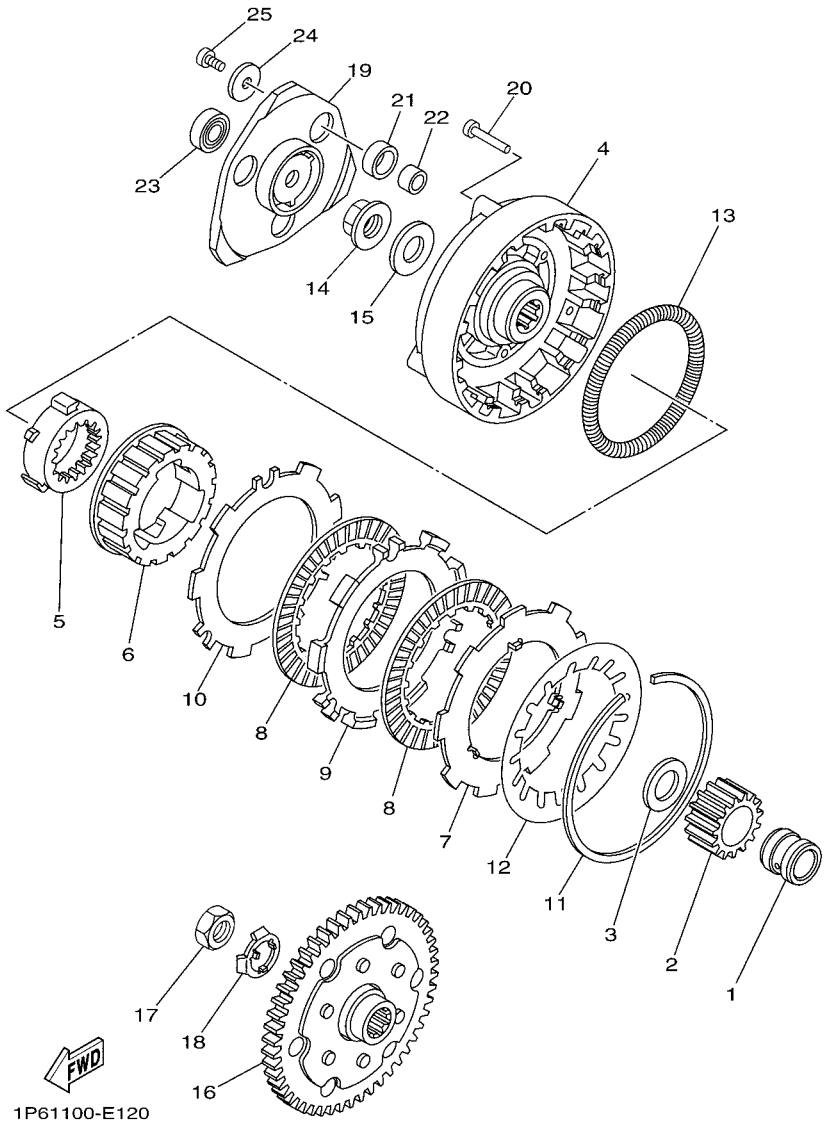

FIG. 12 CLUTCH

REF. NO.	PART NO.	DESCRIPTION	1P6U					REMARKS
1	1P6–E6116–00	COLLAR 1	1					
2	1P6–E6111–10	GEAR, PRIMARY DRIVE	1					
3	90201–17801	WASHER, PLATE	1					
4	1P6–E6311–00	HOUSING, CLUTCH	1					
5	1P6–E6818–01	GEAR, OUTER DRIVE	1					
6	1P6–E6571–01	BOSS, CLUTCH	1					
7	1P6–E6324–00	PLATE, CLUTCH 1	1					
8	1P6–E6330–00	PLATE, FRICTION 2	2					
9	1P6–E6325–00	PLATE, CLUTCH 2	1					
10	1P6–E6326–00	PLATE, CLUTCH 3	1					
11	1P6–E6819–00	CIRCLIP, CLUTCH	1					
12	1P6–E6821–00	SPRING, DISK	1					
13	1P6–E6822–10	SPRING, GARTER	1					
14	90179–14802	NUT	1					
15	90208–14033	WASHER, CONICAL SPRING	1					
16	1P6–E6170–00	PRIMARY DRIVEN GEAR COMP.	1					
17	1P6–E6377–00	NUT, LOCK	1					
18	1P6–E6378–00	WASHER, LOCK	1					
19	1P6–E6551–00	PLATE, PRESSURE 1	1					
20	1P6–E6552–00	PIN, GUIDE	3					
21	1P6–E6152–00	BUSH	3					
22	1P6–E6125–00	ABSORBER 2	3					
23	93306–900Y0	BEARING	1					
24	90201–05810	WASHER, PLATE	3					
25	98512–05012	SCREW, PAN HEAD	3					

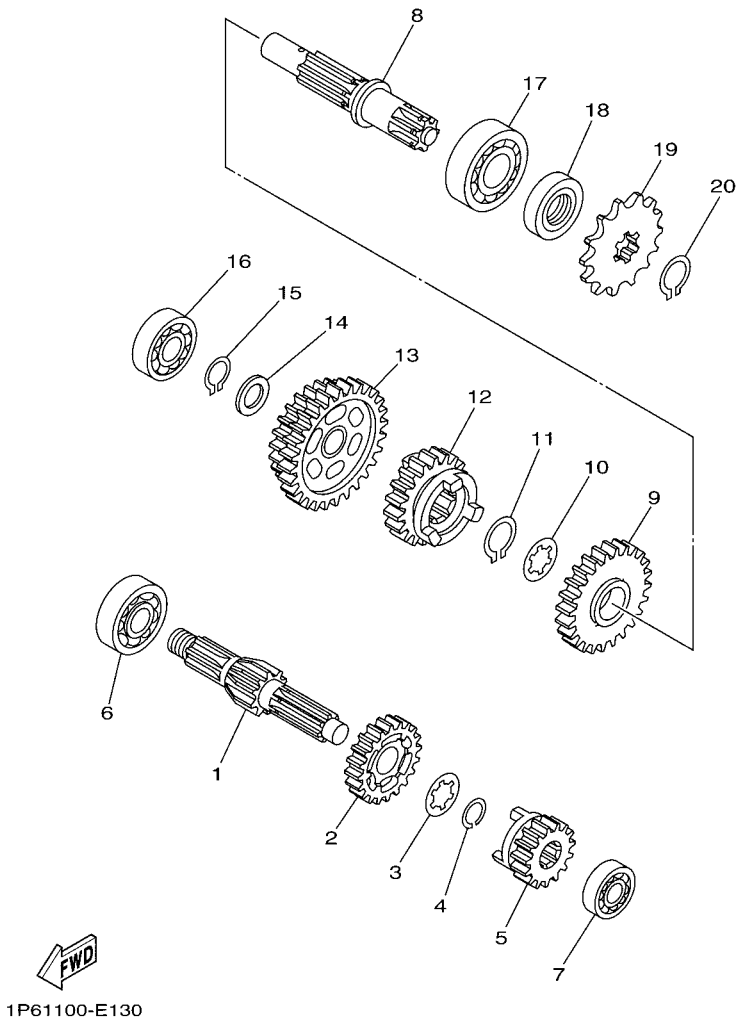

FIG. 13 TRANSMISSION

REF. NO.	PART NO.	DESCRIPTION	1P6U					REMARKS
1	1P6–E7411–01	AXLE, MAIN (12T)	1					
2	1P6–E7131–10	GEAR, 3RD PINION (23T)	1					
3	1P6–E7648–00	WASHER	1					
4	1P6–E7217–00	CLIP, GEAR HOLD 1	1					
5	1P6–E7121–10	GEAR, 2ND PINION (19T)	1					
6	93306–203YT	BEARING	1					
7	93306–001X3	BEARING	1					
8	1P6–E7421–01	AXLE, DRIVE	1					
9	1P6–E7221–10	GEAR, 2ND WHEEL (33T)	1					
10	1P6–E7658–00	WASHER, BELLEVILLE	1					
11	93410–20809	CIRCLIP	1					
12	1P6–E7231–10	GEAR, 3RD WHEEL (28T)	1					
13	1P6–E7211–10	GEAR, 1ST WHEEL (28T/39T)	1					
14	90201–15700	WASHER, PLATE	1					
15	93440–15802	CIRCLIP	1					
16	93306–252Y6	BEARING	1					
17	93306–204YD	BEARING	1					
18	93102–20802	OIL SEAL	1					
19	93812–13812	SPROCKET, DRIVE (13T)	1					
20	93410–20809	CIRCLIP	1					

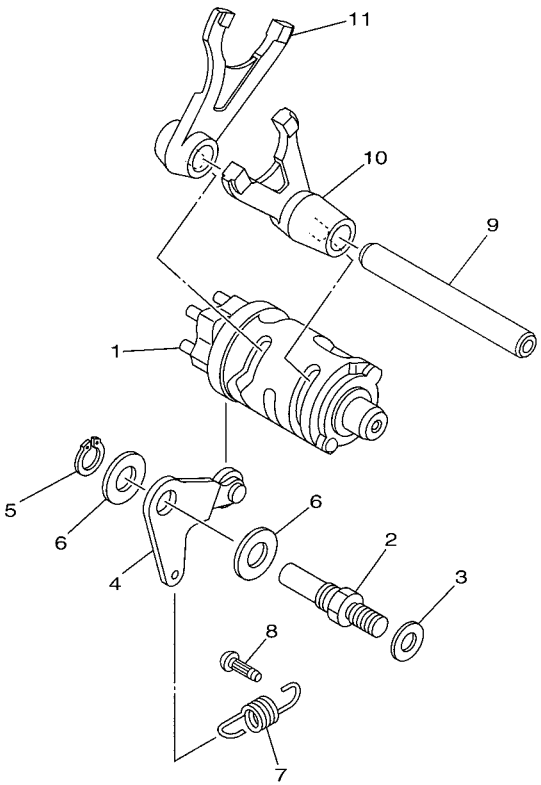

1P61100-E140

FIG. 14 SHIFT CAM & FORK

REF. NO.	PART NO.	DESCRIPTION	1P6U					REMARKS
1	1P6–W1854–00	SHIFT CAM ASSY	1					
2	1P6–E8127–00	STOPPER, SCREW	1					
3	1P6–E8137–01	WASHER 1	1					
4	1P6–E8140–00	STOPPER LEVER ASSY	1					
5	99009–10400	CIRCLIP	1					
6	90201–10823	WASHER, PLATE	2					
7	1P6–E8337–00	SPRING	1					
8	1P6–E6346–00	HOOK, SPRING	1					
9	1P6–E8531–00	BAR, SHIFT FORK GUIDE 1	1					
10	1P6–E8511–10	FORK, SHIFT 1	1					
11	1P6–E8512–10	FORK, SHIFT 2	1					

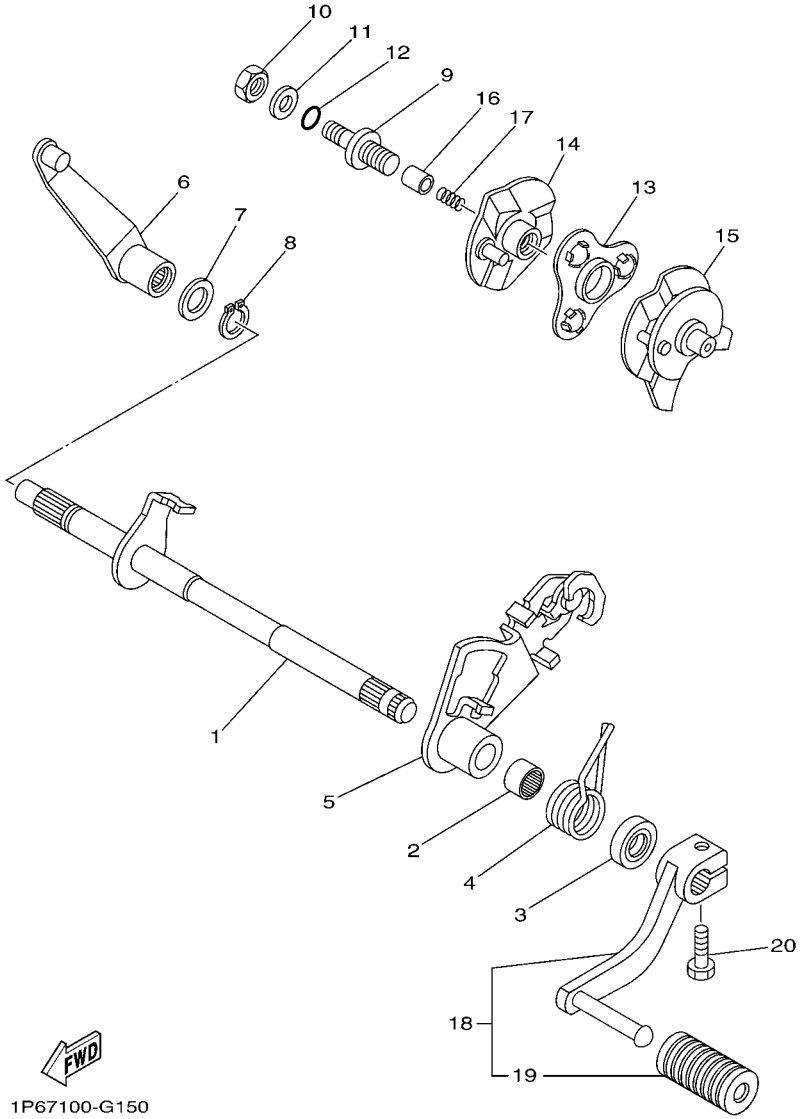

FIG. 15 SHIFT SHAFT

REF. NO.	PART NO.	DESCRIPTION	1P6U					REMARKS
1	1P6–E8101–11	SHIFT SHAFT ASSY	1					
2	93317–11287	BEARING	1					
3	93102–12806	OIL SEAL	1					
4	90508–29007	SPRING, TORSION	1					
5	1P6–18120–00	SHIFT LEVER ASSY	1					
6	1P6–1817A–00	ARM, SHIFT 3	1					
7	90201–128C9	WASHER, PLATE	1					
8	99009–12400	CIRCLIP	1					
9	1P6–E8186–01	SCREW, ADJUSTING	1					
10	90170–08803	NUT	1					
11	9290N–08600	WASHER	1					
12	93210–08810	O-RING	1					
13	1P6–18181–00	HOLDER, PAWL	1					
14	1P6–18104–00	SHIFT GUIDE COMP.	1					
15	1P6–18106–00	GUIDE SHIFT COMP. 2	1					
16	1P6–E8184–00	PIN, PAWL	1					
17	1P6–E8183–00	SPRING	1					
18	1P6–E8110–01	SHIFT PEDAL ASSY	1					
19	1KL–E8113–00	.COVER, SHIFT PEDAL	1					
20	97027–06020	BOLT, HEXAGON	1					

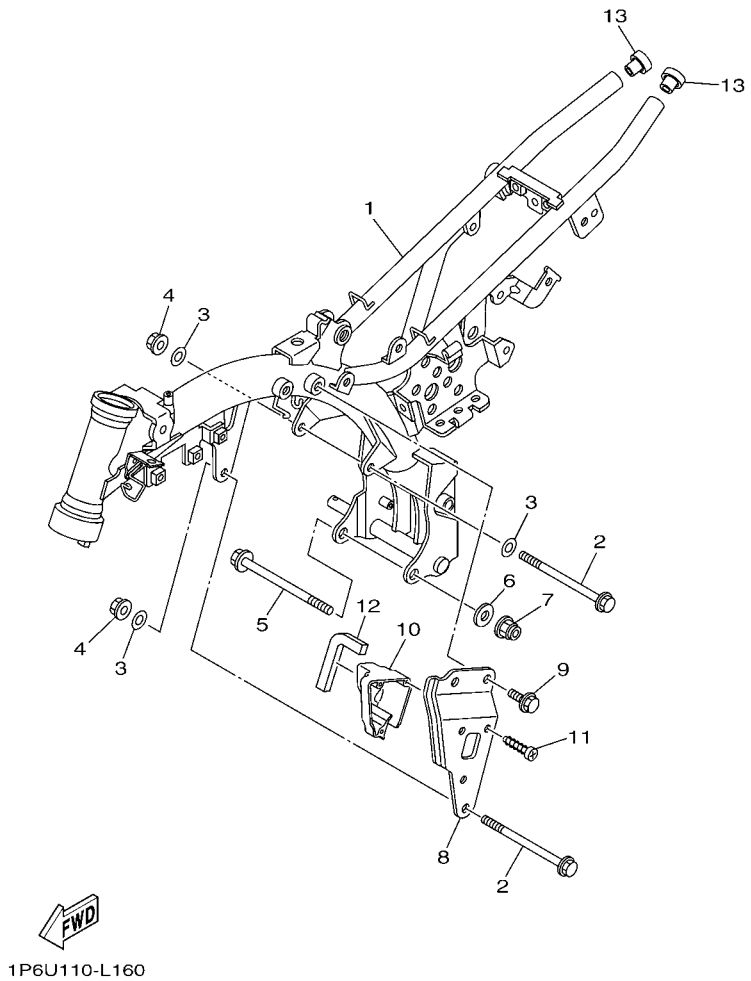

FIG. 16 FRAME

REF. NO.	PART NO.	DESCRIPTION	1P6U					REMARKS
1	1P6–F1110–40	FRAME COMP.	1					
2	90105–08097	BOLT, FLANGE	2					
3	92907–08200	WASHER	3					
4	95602–08200	NUT, SELF-LOCKING	2					
5	90105–10123	BOLT, FLANGE	1					
6	92907–10200	WASHER, PLAIN	1					
7	95602–10200	NUT, U FLANGE	1					
8	1P6–F1387–10	STAY, ENGINE 7	1					
9	95812–08016	BOLT, FLANGE	2					
10	1P6–F117F–10	COVER	1					
11	97707–50516	SCREW, TAPPING	3					
12	90520–20807	DAMPER, PLATE	1					
13	90338–16802	PLUG	2					

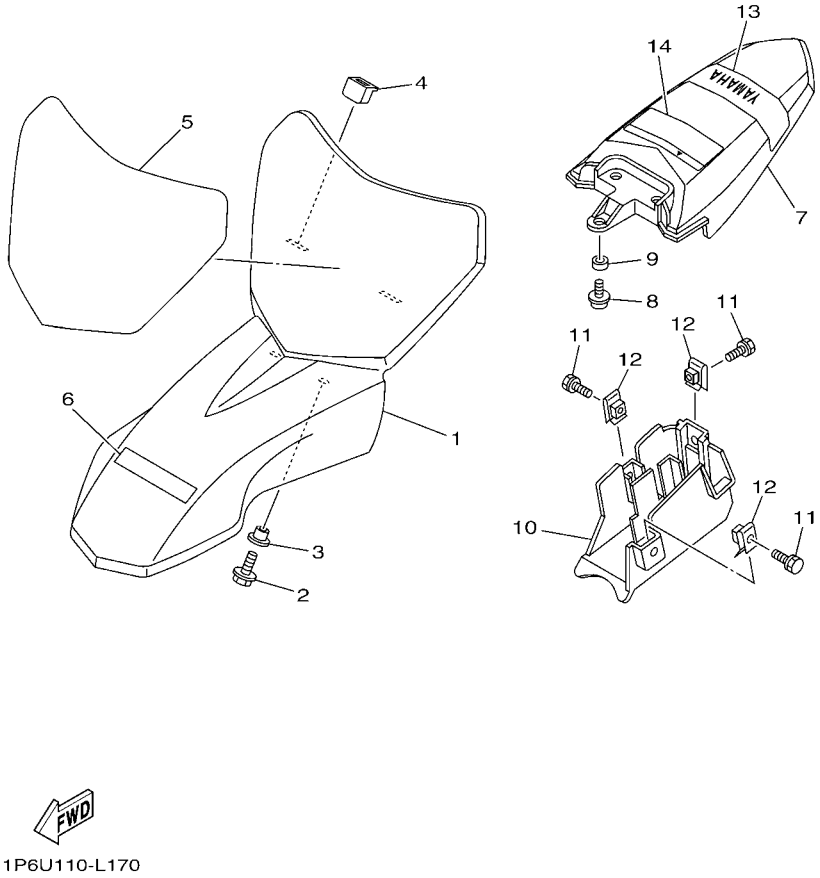

FIG. 17 FENDER

REF. NO.	PART NO.	DESCRIPTION	1P6U					REMARKS
1	1P6–F1511–00	FENDER, FRONT	1					
2	95802–06012	BOLT, FLANGE	2					
3	90387–07818	COLLAR	2					
4	90480–16185	GROMMET	2					
5	1P6–F1569–00	GRAPHIC, 1	1					
6	1P6–F151A–40	LABEL 1	1					
7	1P6–F1611–00	FENDER, REAR	1					
8	90159–06830	SCREW, WITH WASHER	3					
9	90387–07808	COLLAR	3					
10	1P6–F160E–00	BOX	1					
11	97502–06514	BOLT, WITH WASHER	3					
12	90183–06023	NUT, SPRING	3					
13	1P6–F163G–00	EMBLEM 1	1					
14	3PT–2118K–A1	LABEL, CAUTION	1					

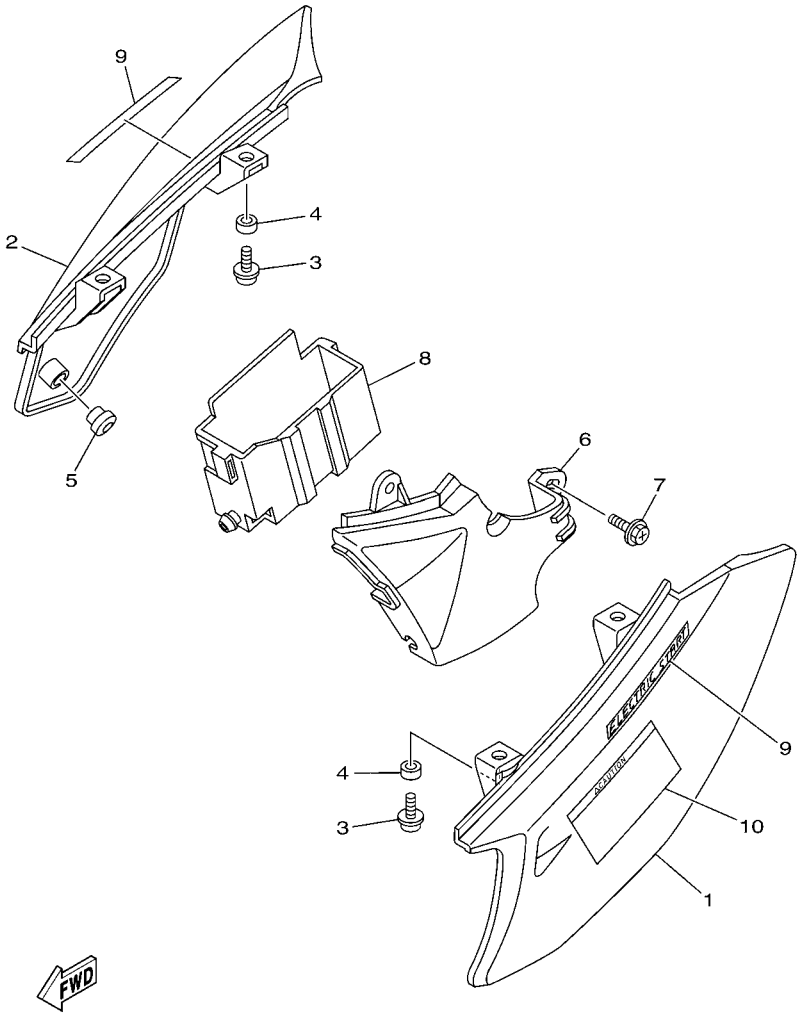

1P6C110-H181

FIG. 18 SIDE COVER

REF. NO.	PART NO.	DESCRIPTION	1P6J					REMARKS
1	1P6–F1711–00	COVER, SIDE 1	1					
2	1P6–F1721–00	COVER, SIDE 2	1					
3	90159–06830	SCREW, WITH WASHER	4					
4	90387–07808	COLLAR	4					
5	1P6–F1717–00	DAMPER	1					
6	1P6–H2129–00	COVER, BATTERY	1					
7	90159–06022	SCREW, WITH WASHER	2					
8	1P6–F172W–00	COVER	1					
9	1P6–F1783–00	EMBLEM 3	2					
10	1P6–2839Y–00	LABEL, CAUTION 2	1					

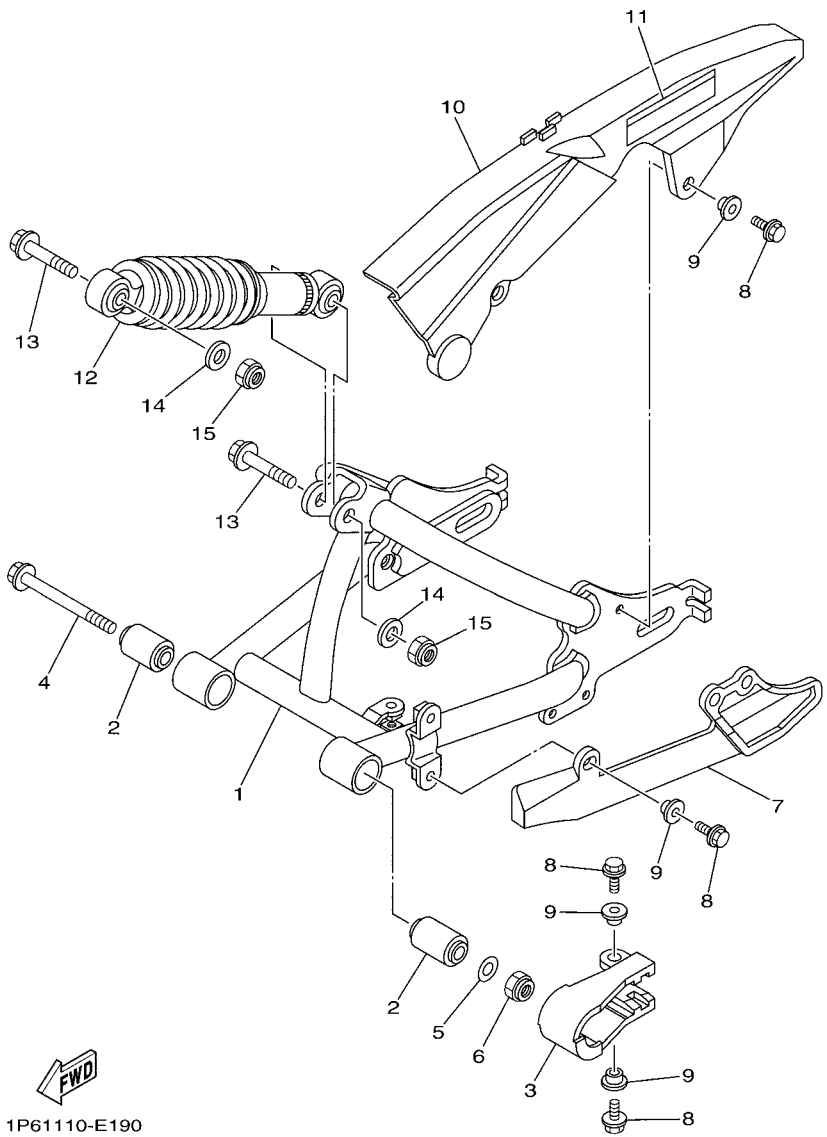

FIG. 19 REAR ARM & SUSPENSION

REF. NO.	PART NO.	DESCRIPTION	1P6U					REMARKS
1	1P6–F2110–00	REAR ARM COMP.	1					
2	1P6–F2123–00	BUSH 1	2					
3	1P6–F2151–00	SEAL, GUARD	1					
4	90105–10063	BOLT, FLANGE	1					
5	90201–08759	WASHER, PLATE	1					
6	90185–10037	NUT, SELF-LOCKING	1					
7	1P6–F2199–00	SUPPORT, CHAIN	1					
8	95802–06012	BOLT, FLANGE	7					
9	90387–07818	COLLAR	2					
10	1P6–F2311–00	CASE, CHAIN	1					
11	1P6–F218G–00	LABEL, TIRE	1					
12	1P6–F2210–01	SHOCK ABSORBER ASSY, REAR	1					
13	90105–10122	BOLT, FLANGE	2					
14	90201–10774	WASHER, PLATE	2					
15	95607–10100	NUT, U	2					

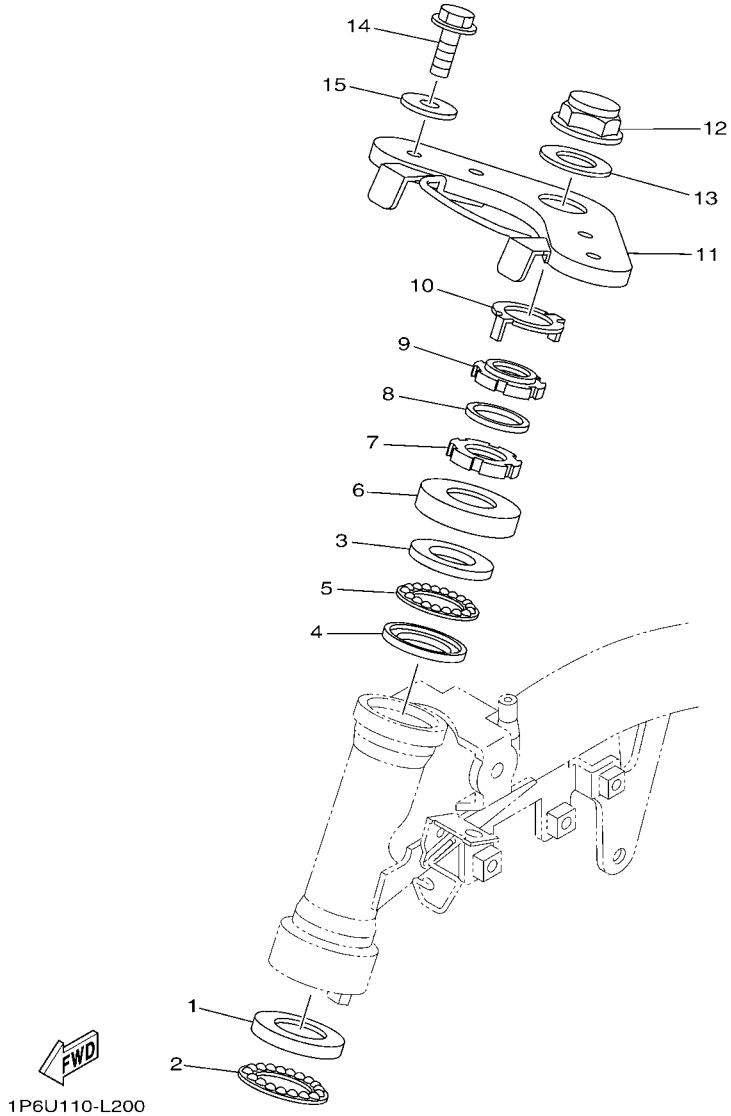

FIG. 20 STEERING

REF. NO.	PART NO.	DESCRIPTION	1P6U					REMARKS
1	1KL–F3412–00	RACE, BALL 2	1					
2	5VL–F341E–00	RETAINER, BALL BEARING	1					
3	4RT–F3411–00	RACE, BALL 1	1					
4	4RT–F3412–00	RACE, BALL 2	1					
5	1P6–F341E–00	RETAINER, BALL BEARING	1					
6	1P6–F3416–00	COVER, BALL RACE 2	1					
7	90179–25864	NUT	1					
8	90202–26142	WASHER, PLATE	1					
9	90179–22801	NUT	1					
10	1P6–F3418–01	WASHER, SPECIAL	1					
11	1P6–F3430–10	HANDLE CROWN COMP.	1					
12	90176–22801	NUT, CROWN	1					
13	5VL–F3165–01	WASHER, FELT	1					
14	95827–10030	BOLT, FLANGE	2					
15	90201–100S7	WASHER, PLATE	2					

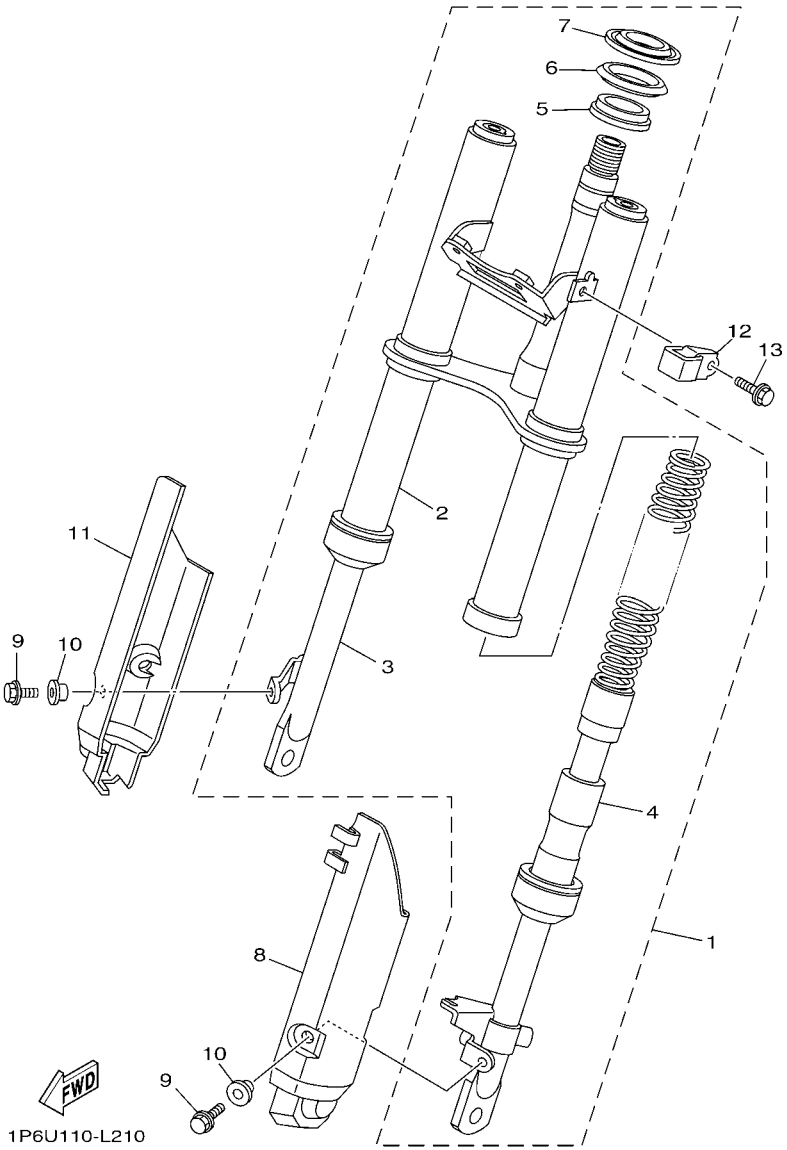

FIG. 21 FRONT FORK

REF. NO.	PART NO.	DESCRIPTION	1P6U					REMARKS
1	1P6–F3100–00	FRONT FORK ASSY	1					
2	1P6–F3340–00	.UNDER BRACKET COMP.	1					
3	1P6–F3350–00	.SHOCK ABSORBER ASSY	1					
4	1P6–F3390–00	.SHOCK ABSORBER ASSY 2	1					
5	1P6–F3118–00	.SPACER	1					
6	1P6–F3462–00	.SEAL, DUST	1					
7	4FP–F3411–10	.RACE, BALL 1	1					
8	1P6–F315H–00	PROTECTOR 1	1					
9	95027–06012	BOLT, FLANGE	4					
10	90387–07818	COLLAR	4					
11	1P6–F315J–00	PROTECTOR 2	1					
12	1P6–F3857–00	HOLDER	1					
13	90105–05002	BOLT, FLANGE	1					

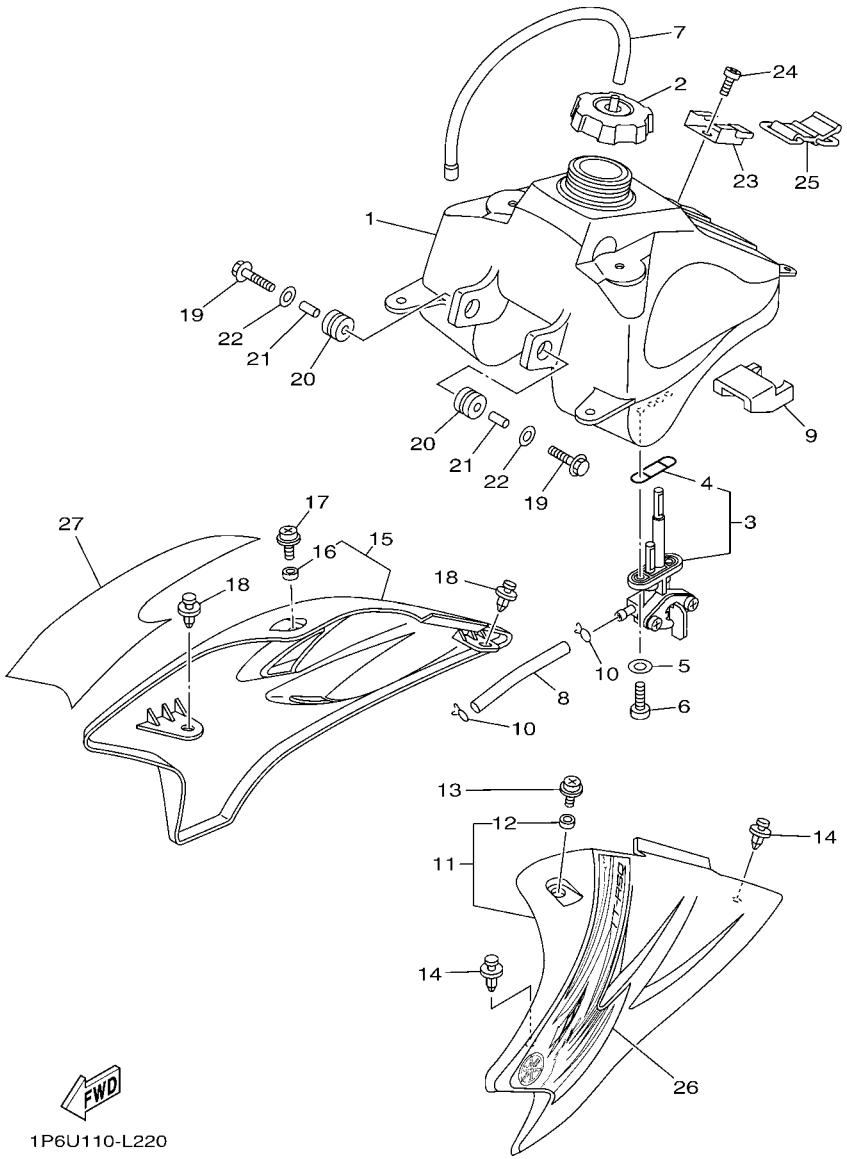

FIG. 22 FUEL TANK

REF. NO.	PART NO.	DESCRIPTION	1P6U					REMARKS
1	1P6–24110–10	FUEL TANK COMP.	1					
2	2FJ–24610–10	CAP ASSY	1					
3	1P6–24500–10	FUEL COCK ASSY 1	1					
4	1P6–24512–10	.GASKET	1					
5	90202–05193	WASHER, PLATE	2					
6	90149–06011	SCREW	2					
7	1P6–F1826–10	PIPE, BREATHER	1					
8	1P6–24311–00	PIPE, FUEL 1	1					
9	1P6–F4181–00	DAMPER, LOCATING 1	1					
10	90467–09854	CLIP	2					
11	1P6–F137A–00	SCOOP AIR ASSY. 1	1					
12	90387–07805	.COLLAR	1					
13	90159–06182	SCREW, WITH WASHER	1					
14	90269–07076	RIVET	2					
15	1P6–F137B–00	SCOOP AIR ASSY. 2	1					
16	90387–07805	.COLLAR	1					
17	90159–06182	SCREW, WITH WASHER	1					
18	90269–07076	RIVET	2					
19	95807–06030	BOLT, FLANGE	2					
20	90480–18803	GROMMET	2					
21	90387–07804	COLLAR	2					
22	90201–06072	WASHER, PLATE	2					
23	1P6–F4116–01	STAY, FUEL TANK 2	1					
24	98902–06010	SCREW, BIND	1					
25	1P6–F4173–00	BAND, TANK FITTING 1	1					
26	1P6–F4244–50	GRAPHIC, FUEL TANK 1	1					
27	1P6–F4246–50	GRAPHIC 3	1					

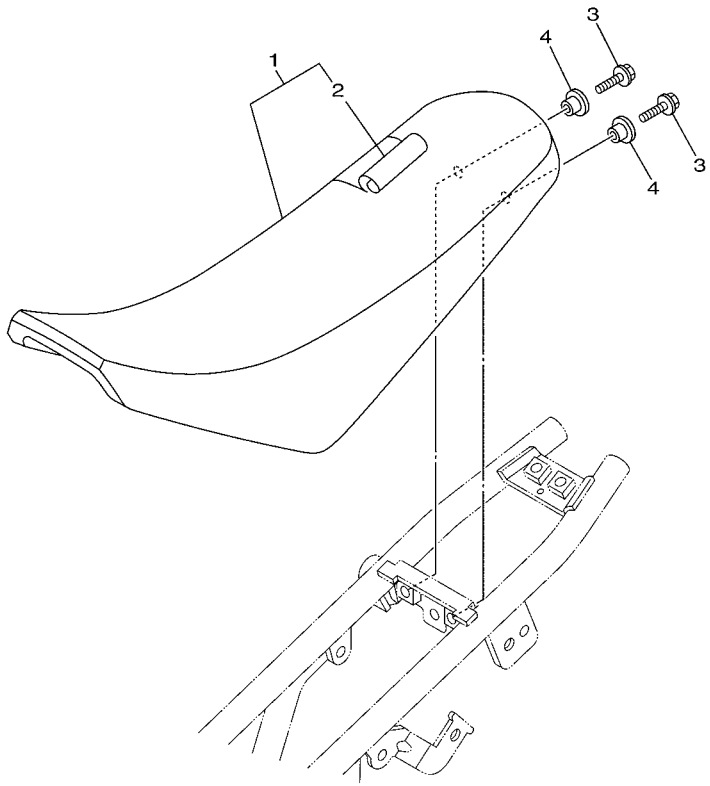

1P61100-E230

FIG. 23 SEAT

REF. NO.	PART NO.	DESCRIPTION	1P6U					REMARKS
1	1P6–F4770–00	SEMI-DOUBLE SEAT ASSY	1					
2	1P6–F470F–00	.SEAT COVER COMP.	1					
3	97502–06520	BOLT, WITH WASHER	2					
4	90387–06859	COLLAR	2					

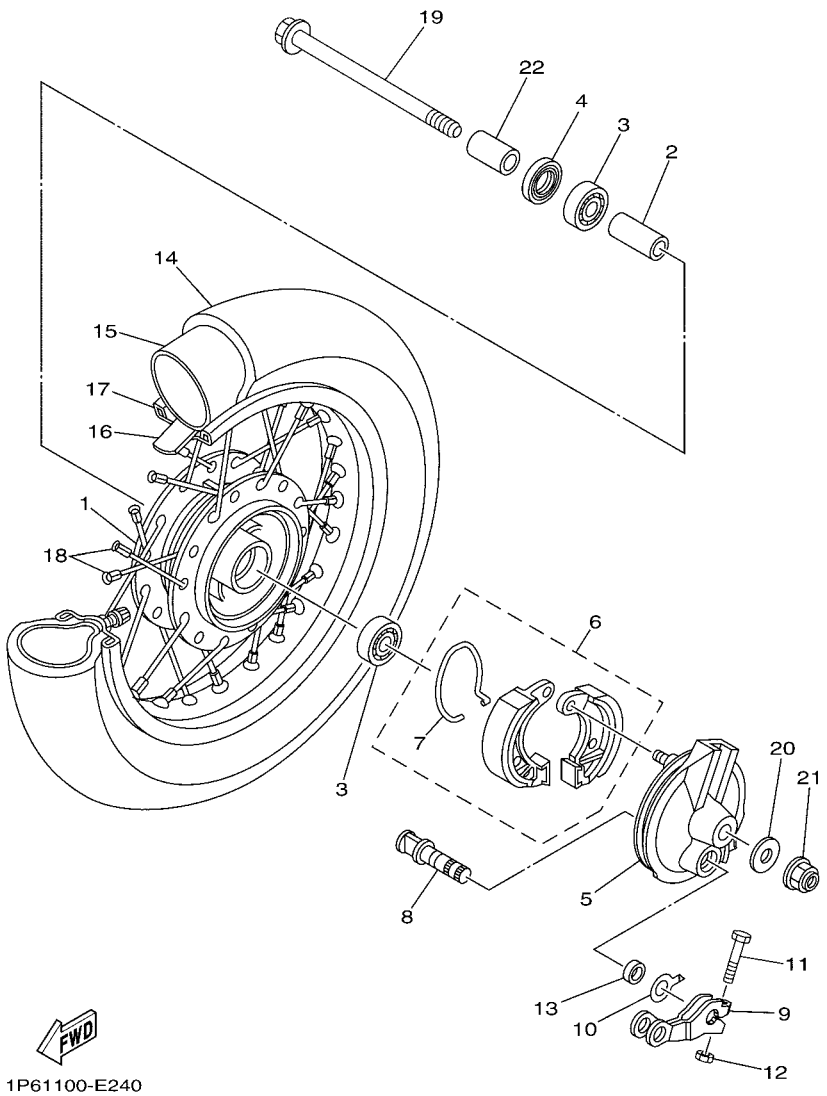

FIG. 24 FRONT WHEEL

REF. NO.	PART NO.	DESCRIPTION	1P6U					REMARKS
1	1P6–F5111–00	HUB, FRONT	1					
2	90387–12830	COLLAR	1					
3	93306–201X1	BEARING	2					
4	93106–20811	OIL SEAL	1					
5	1P6–F5121–00	PLATE, BRAKE SHOE	1					
6	1P6–W253A–00	BRAKE SHOE KIT	1					
7	1P6–25133–00	.SPRING, RETURN	1					
8	1P6–F5151–01	CAMSHAFT	1					
9	1P6–F5155–01	LEVER, CAMSHAFT 1	1					
10	1P6–F533A–01	PLATE, INDICATOR	1					
11	90101–06278	BOLT	1					
12	95307–06600	NUT	1					
13	93104–12800	OIL SEAL	1					
14	94125–10800	TIRE (2.50-10 C183A 4PR TT)	1					CHENG SHIN
15	94225–10800	TUBE (2.50-10 TR4)	1					CHENG SHIN
16	94325–10800	BAND, RIM (2.50-10)	1					CHENG SHIN
17	94414–10800	RIM (1.40-10)	1					
18	1P6–F5104–01	SPOKE SET, FRONT	1					
19	1P6–F5181–01	AXLE, WHEEL	1					
20	90201–12190	WASHER, PLATE	1					
21	95602–12200	NUT, SELF-LOCKING	1					
22	90387–12833	COLLAR	1					

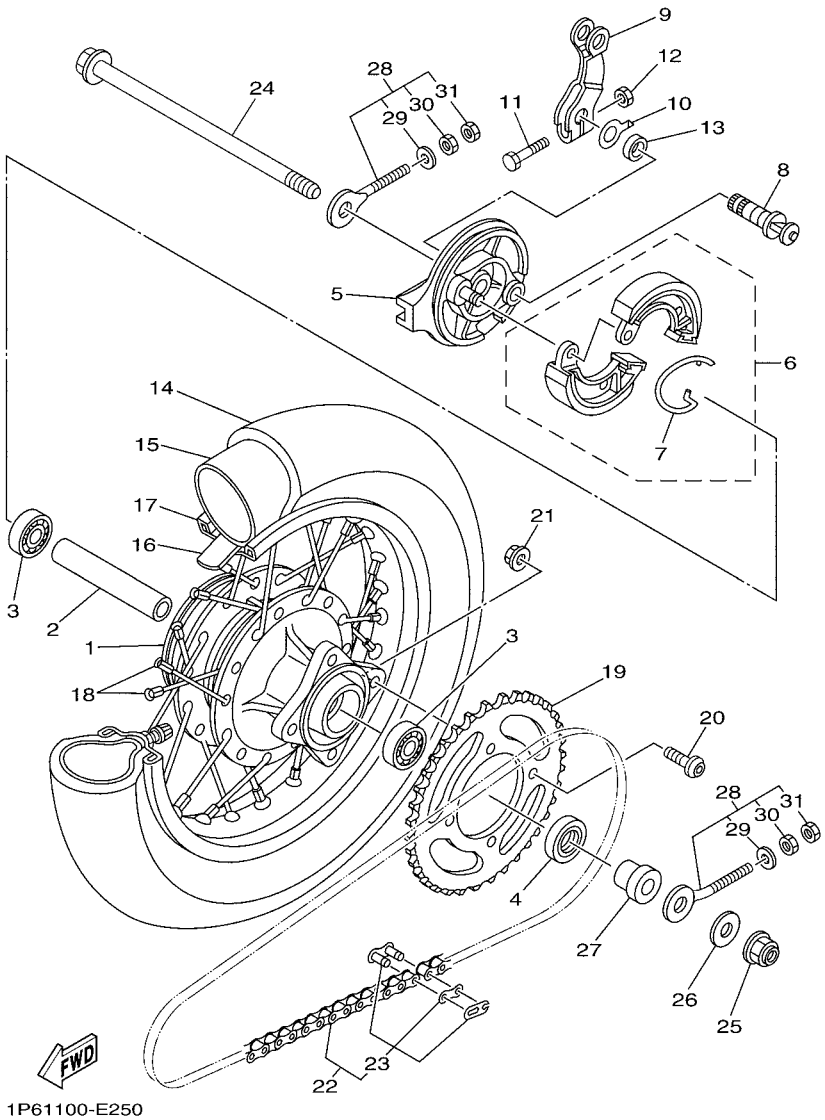

FIG. 25 REAR WHEEL

REF. NO.	PART NO.	DESCRIPTION	1P6U					REMARKS
1	1P6–F5311–00	HUB, REAR	1					
2	90387–12832	COLLAR	1					
3	93306–201X1	BEARING	2					
4	93106–20811	OIL SEAL	1					
5	1P6–F5121–00	PLATE, BRAKE SHOE	1					
6	1P6–W253A–00	BRAKE SHOE KIT	1					
7	1P6–25133–00	.SPRING, RETURN	1					
8	1P6–F5151–01	CAMSHAFT	1					
9	1P6–F5155–01	LEVER, CAMSHAFT 1	1					
10	1P6–F533A–01	PLATE, INDICATOR	1					
11	90101–06278	BOLT	1					
12	95307–06600	NUT	1					
13	93104–12800	OIL SEAL	1					
14	94125–10800	TIRE (2.50-10 C183A 4PR TT)	1					CHENG SHIN
15	94225–10800	TUBE (2.50-10 TR4)	1					CHENG SHIN
16	94325–10800	BAND, RIM (2.50-10)	1					CHENG SHIN
17	94414–10800	RIM (1.40-10)	1					
18	1P6–F5104–01	SPOKE SET, FRONT	1					
19	1P6–F5437–11	SPROCKET, DRIVEN (37T)	1					
20	90111–08024	BOLT,HEX. SOCKET BUTTON	4					
21	95607–08200	NUT, SELF-LOCKING	4					
22	94568–A1080	CHAIN	1					
23	94668–A1001	.JOINT, CHAIN	1					
24	1P6–F5381–01	AXLE, WHEEL	1					
25	95602–12200	NUT, SELF-LOCKING	1					
26	90201–12190	WASHER, PLATE	1					
27	90387–12834	COLLAR	1					

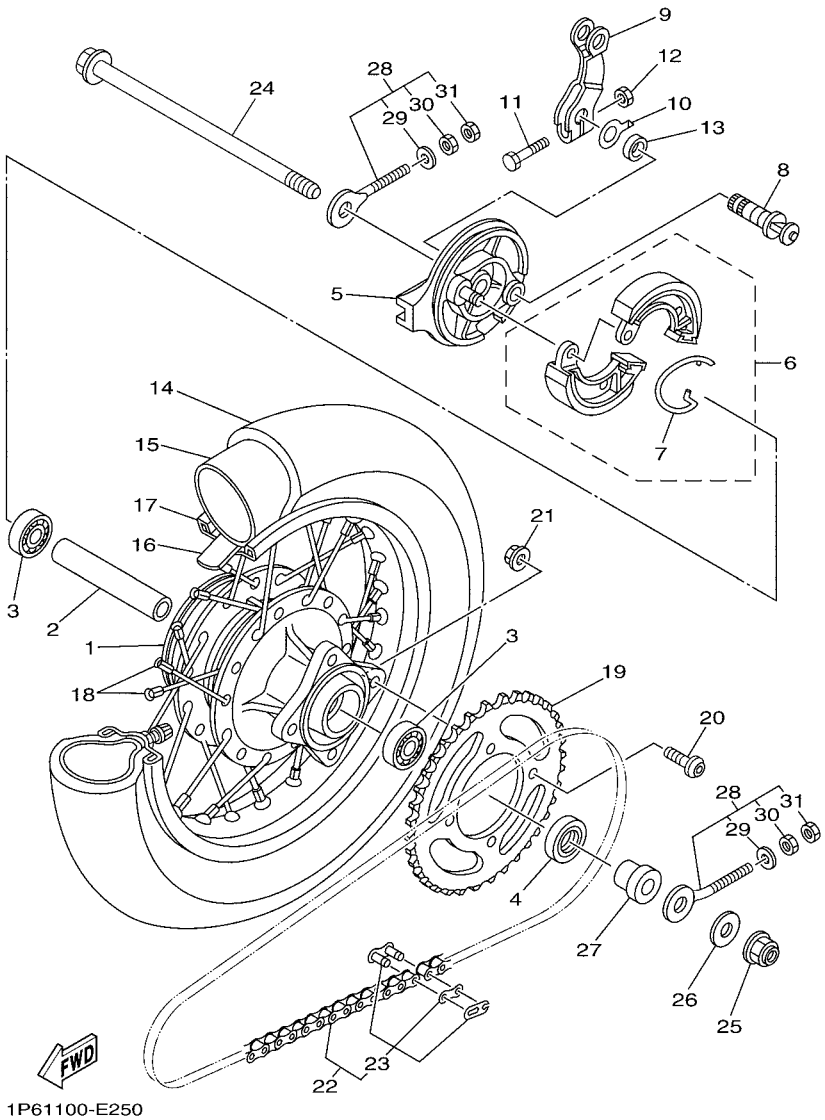

FIG. 25 REAR WHEEL

REF. NO.	PART NO.	DESCRIPTION	1P6U					REMARKS
28	1P6–F538G–11	PULLER, CHAIN	2					
29	90201–06861	.WASHER, PLATE	1					
30	90170–06809	.NUT	1					
31	95307–06600	.NUT	1					

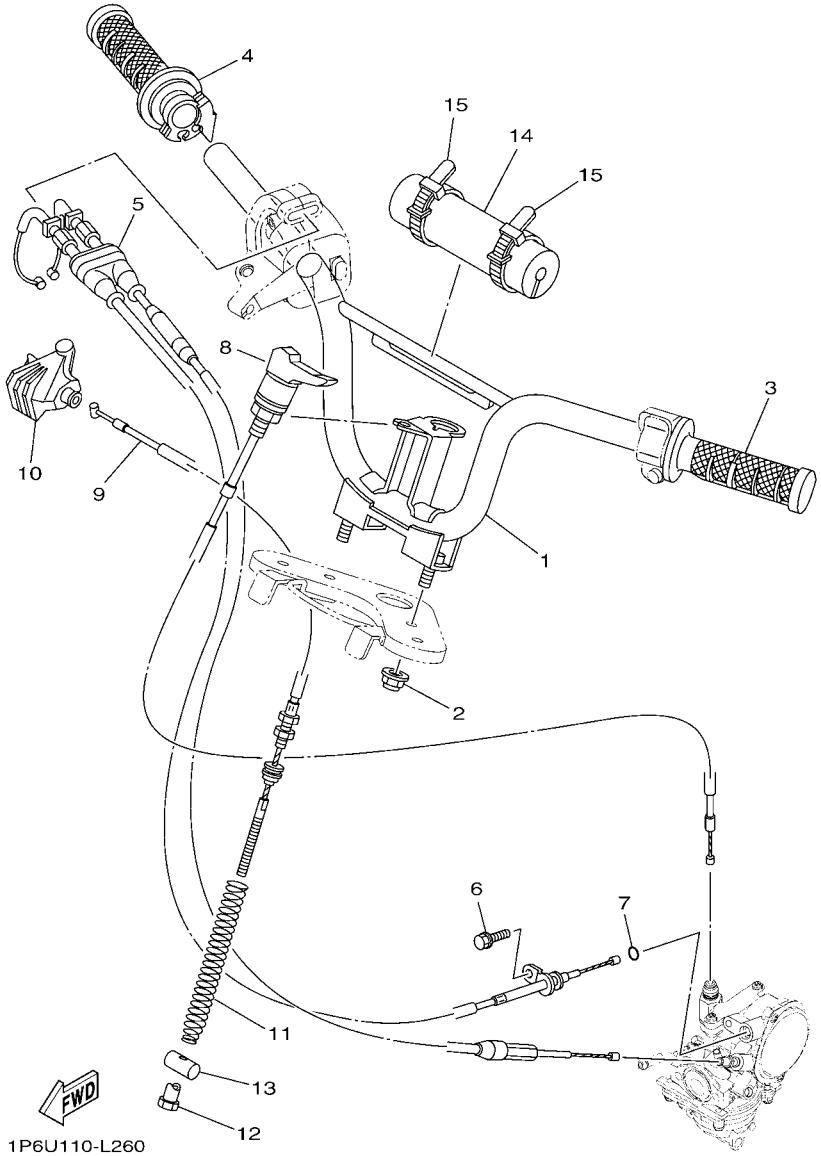

FIG. 26 STEERING HANDLE & CABLE

REF. NO.	PART NO.	DESCRIPTION	1P6U					REMARKS
1	1P6–F6111–00	HANDLEBAR	1					
2	95602–10200	NUT, U FLANGE	2					
3	1P6–F6241–00	GRIP	1					
4	1P6–F6240–10	GRIP ASSY	1					
5	1P6–F6302–00	THROTTLE CABLE ASSY	1					
6	97502–05510	BOLT, WITH WASHER	1					
7	93210–06810	O-RING	1					
8	1P6–F6331–02	CABLE, STARTER 1	1					
9	1P6–F6341–01	WIRE, BRAKE 1	1					
10	1P6–F6372–00	COVER, HANDLE LEVER 1	1					
11	1P6–F6314–01	SPRING	1					
12	90179–06826	NUT	1					
13	90249–12808	PIN	1					
14	1P6–F6124–00	PROTECTOR, HANDLEBAR	1					
15	4TU–H3936–10	BAND, SWITCH CORD	2					

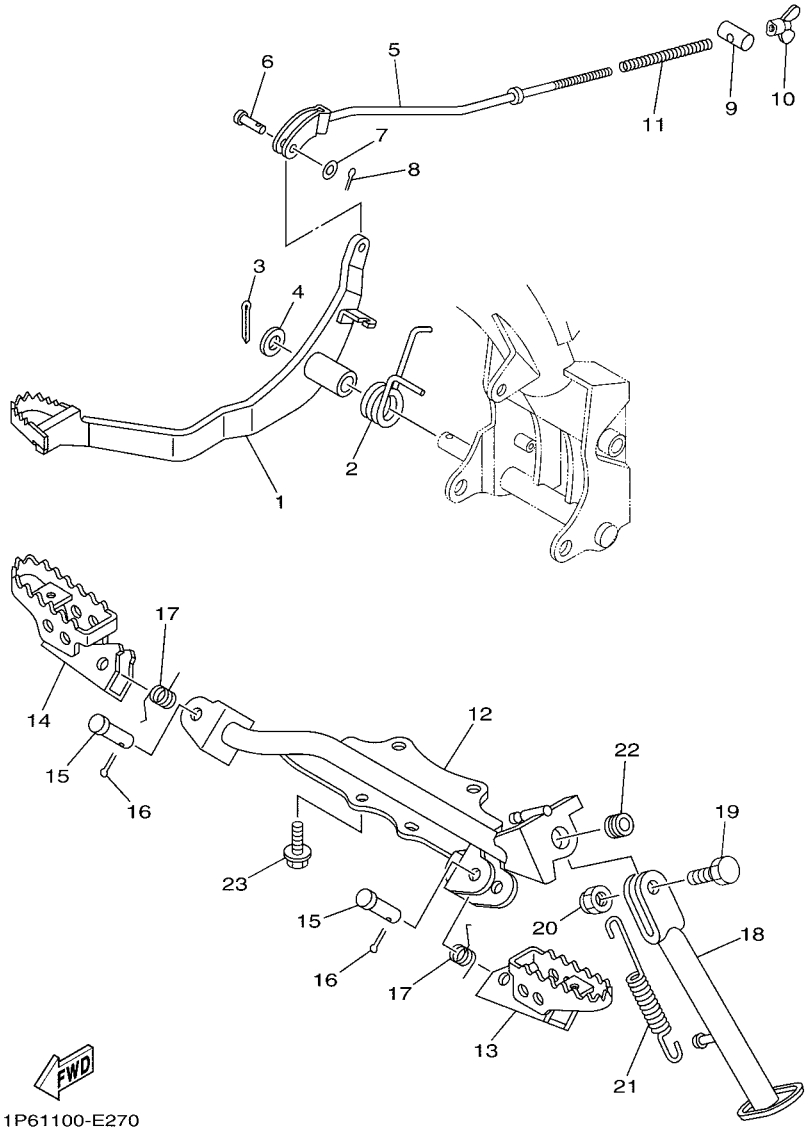

FIG. 27 STAND & FOOTREST

REF. NO.	PART NO.	DESCRIPTION	1P6U					REMARKS
1	1P6–F7211–01	PEDAL, BRAKE	1					
2	90508–40805	SPRING, TORSION	1					
3	91402–20020	PIN, COTTER	1					
4	92902–12600	WASHER, PLATE	1					
5	1P6–F7231–01	ROD, BRAKE	1					
6	90240–06805	PIN, CLEVIS	1					
7	9290N–06600	WASHER	1					
8	91402–25015	PIN, COTTER	1					
9	90249–12808	PIN	1					
10	90175–06013	NUT, WING	1					
11	90501–10806	SPRING, COMPRESSION	1					
12	1P6–F7411–00	FOOTREST 1	1					
13	1P6–F7451–01	FOOTREST	1					
14	1P6–F7461–01	FOOTREST	1					
15	90240–10002	PIN, CLEVIS	2					
16	91402–25015	PIN, COTTER	2					
17	1P6–F7456–01	SPRING, RETURN	2					
18	1P6–F7311–00	STAND, SIDE	1					
19	90101–10003	BOLT	1					
20	90185–10037	NUT, SELF-LOCKING	1					
21	90506–25802	SPRING, TENSION	1					
22	1P6–F7313–01	COLLAR	1					
23	95812–08020	BOLT, FLANGE	4					

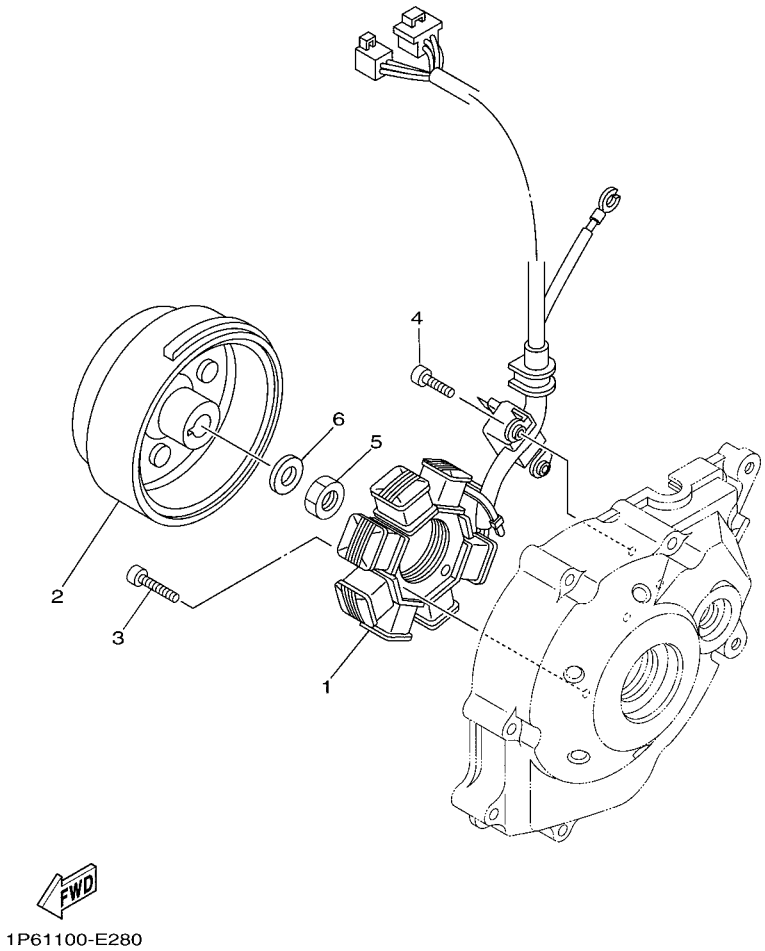

FIG. 28 GENERATOR

REF. NO.	PART NO.	DESCRIPTION	1P6U					REMARKS
1	1P6–H1410–01	STATOR ASSY	1					
2	1P6–H1450–01	ROTOR ASSY	1					
3	91312–06025	BOLT	3					
4	91312–06016	BOLT	2					
5	95312–12600	NUT	1					
6	90201–12818	WASHER, PLATE	1					

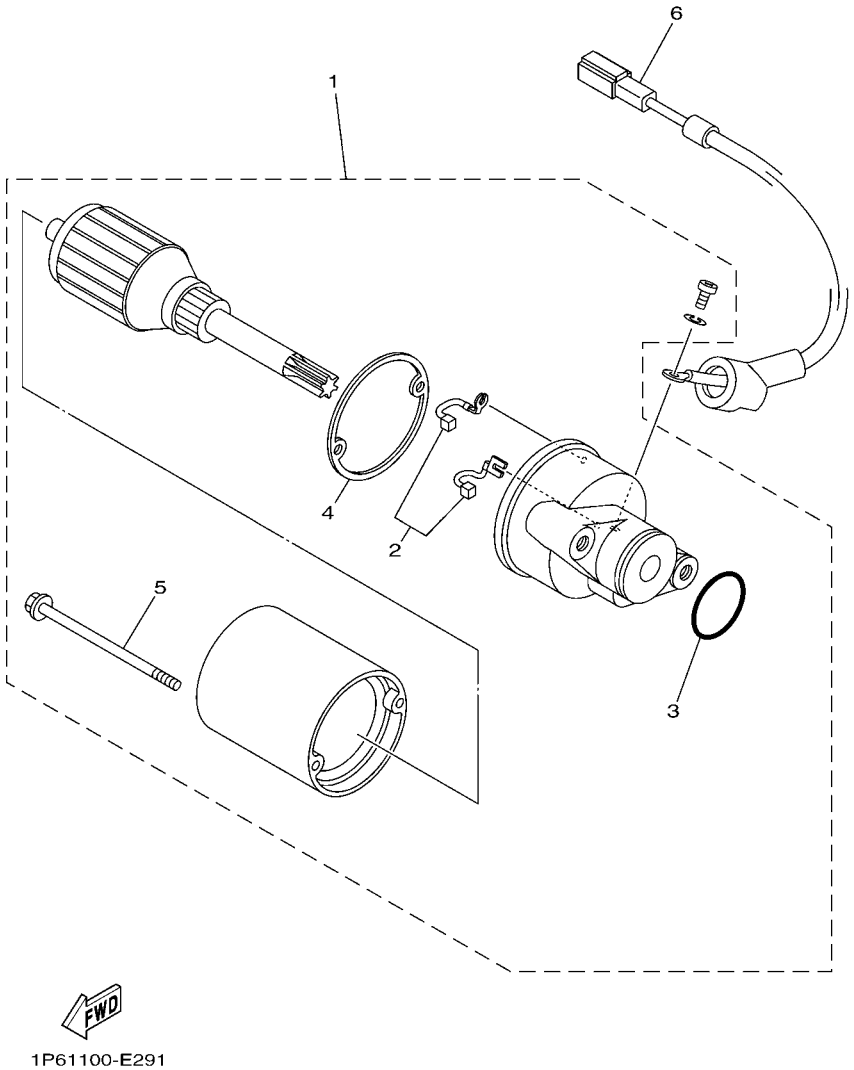

FIG. 29 STARTING MOTOR

REF. NO.	PART NO.	DESCRIPTION	1P6U					REMARKS
1	1P6–H1890–00	MOTOR ASSY	1					
2	4RT–H1801–00	.BRUSH SET	1					
3	93210–23614	.O-RING	1					
4	93210–44678	.O-RING	1					
5	5WV–H1828–00	.SCREW 2	2					
6	1P6–H183G–00	CORD COMP.	1					

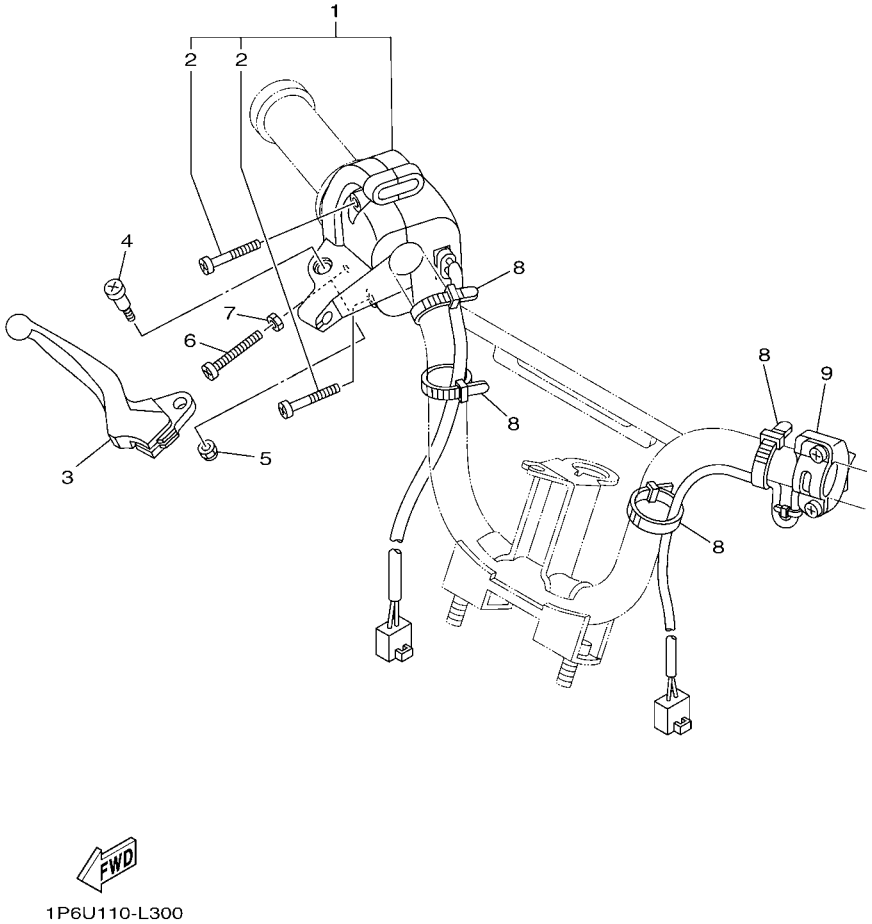

FIG. 30 HANDLE SWITCH & LEVER

REF. NO.	PART NO.	DESCRIPTION	1P6U					REMARKS
1	1P6–H259E–20	SWITCH ASSY	1					
2	98502–05035	.SCREW, PAN HEAD	2					
3	1P6–H3922–00	LEVER 2	1					
4	90157–05801	SCREW, PAN HEAD	1					
5	95602–05100	NUT, U	1					
6	90157–05803	SCREW, PAN HEAD	1					
7	95302–05700	NUT	1					
8	4TU–H3936–00	BAND, SWITCH CORD	4					
9	1P6–H3976–11	SWITCH, HANDLE 1	1					

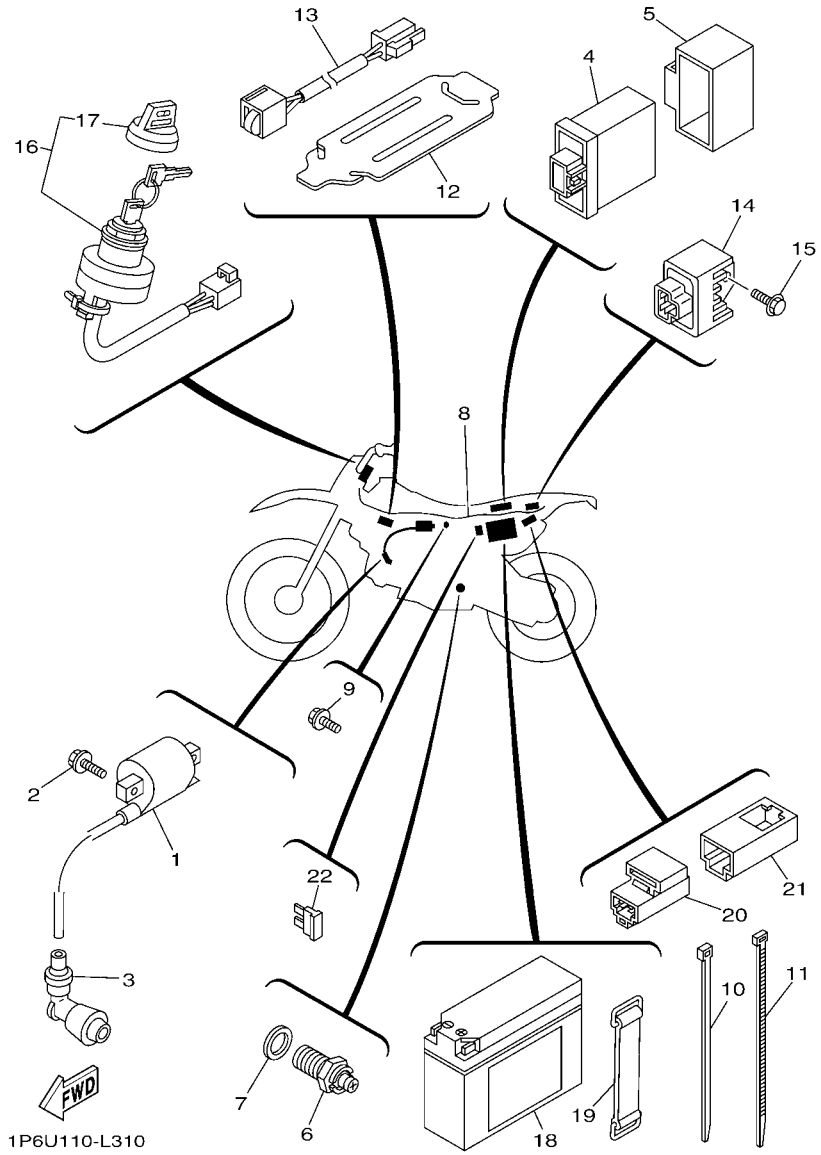

FIG. 31 ELECTRICAL 1

REF. NO.	PART NO.	DESCRIPTION	1P6U					REMARKS
1	1P6–H2310–00	IGNITION COIL ASSY	1					
2	95022–06020	BOLT, FLANGE	2					
3	4BP–82370–00	PLUG CAP ASSY	1					
4	1P6–H5540–00	C.D.I. UNIT ASSY	1					
5	1P6–H5546–00	BAND	1					
6	5VL–H2540–11	NEUTRAL SWITCH ASSY	1					
7	90430–10188	GASKET	1					
8	1P6–H2590–00	WIRE HARNESS ASSY	1					
9	97502–06514	BOLT, WITH WASHER	1					
10	90464–35803	CLAMP	5					
11	90464–20818	CLAMP	2					
12	12B–H252U–00	COVER	1					
13	5FU–82560–30	THERMO SWITCH ASSY	1					
14	4GU–H1960–00	RECTIFIER & REGULATOR ASSY	1					
15	97502–06514	BOLT, WITH WASHER	1					
16	1P6–H2510–11	MAIN SWITCH ASSY	1					
17	1P6–H2579–00	.CAP, KEY	1					
18	4JS–82100–01	BATTERY ASSY (GS GT4B-5)	1					
19	1P6–H2131–00	BAND, BATTERY	1					
20	29U–81950–93	RELAY ASSY	1					
21	1P6–H252U–00	COVER	1					
22	1P6–H2151–00	FUSE (10A)	1					

PART NO.	REF. NO.
4GL–11134–10	1 – 2
5DV–11605–00	2 – 11
5DV–11607–00	2 – 11
5DV–11633–00	2 – 9
5DV–11636–10	2 – 8
5DV–11638–10	2 – 8
5DV–12114–01	3 – 4
4GL–12210–00	4 – 12
1B2–14103–00	7 – 14
1P6–14104–00	7 – 15
1P6–14107–20	7 – 16
1P6–1410A–10	7 – 12
3F9–14118–00	7 – 30
1P6–1411F–25	7 – 8
1P6–14141–12	7 – 6
1P6–14142–12	7 – 4
1P6–14147–00	7 – 3
18A–1414A–63	7 – 5
1UY–14155–00	7 – 24
522–14161–00	7 – 23
22F–14173–00	7 – 13
1P6–14185–00	7 – 17
53L–14186–00	7 – 18
5LW–14191–00	7 – 21
1P6–14196–00	7 – 20
1B2–14216–00	7 – 10
1P6–14293–00	7 – 25
1P6–14651–00	1 – 4
1P6–14780–00	8 – 2
1P6–14905–00	7 – 11
1P6–1490J–10	7 – 7
1P6–14935–00	7 – 9
5CY–14951–00	7 – 27
5LW–14994–00	7 – 22
4ST–15524–00	11 – 3
3AY–15580–01	11 – 5
3AY–15583–00	11 – 6
1P6–18104–00	15 – 14
1P6–18106–00	15 – 15
1P6–18120–00	15 – 5
1P6–1817A–00	15 – 6
1P6–18181–00	15 – 13
3PT–2118K–A1	17 – 14
1P6–24110–10	22 – 1
22W–24181–00	8 – 27
1P6–24311–00	22 – 8
1P6–24500–10	22 – 3
1P6–24512–10	22 – 4

PART NO.	REF. NO.
2FJ–24610–10	22 – 2
1P6–25133–00	24 – 7
	25 – 7
1P6–2839Y–00	18 – 10
68V–8182L–00	7 – 2
29U–81950–93	31 – 20
4JS–82100–01	31 – 18
5FU–82103–00	7 – 29
4BP–82370–00	31 – 3
5FU–82560–30	31 – 13
5FU–83790–00	7 – 28
1P6–E111F–00	4 – 3
1P6–E1181–00	1 – 13
1P6–E1185–00	1 – 5
1P6–E1186–00	1 – 8
1P6–E1311–10	1 – 16
1P6–E1351–00	1 – 17
1P6–E1422–00	2 – 5
1P6–E1631–00	2 – 8
1P6–E1634–00	2 – 10
1P6–E1651–00	2 – 4
1P6–E1681–00	2 – 2
1P6–E2111–00	3 – 1
1P6–E2117–00	3 – 6
1P6–E2118–00	3 – 5
1P6–E2119–00	3 – 3
1P6–E2121–00	3 – 2
5VL–E2151–00	3 – 7
5VL–E2156–00	3 – 9
1P6–E2170–00	4 – 1
1P6–E2176–00	4 – 5
5VL–E2213–10	4 – 13
1P6–E2231–00	4 – 9
1P6–E2241–00	4 – 10
1P6–E3300–11	5 – 1
1P6–E3324–00	5 – 10
1P6–E3325–10	5 – 2
5VL–E3329–00	5 – 5
1P6–E3411–00	5 – 9
1P6–E3575–01	6 – 6
1P6–E3586–10	6 – 1
1P6–E3595–00	6 – 2
1P6–E4101–20	7 – 1
1P6–E4411–01	6 – 7
1P6–E4412–00	6 – 8
1P6–E4437–00	6 – 12
4FP–E443E–00	6 – 15
1P6–E4451–00	6 – 10

PART NO.	REF. NO.
1P6–E4452–00	6 – 9
1P6–E4453–10	6 – 13
1P6–E4472–00	6 – 11
1P6–E4613–00	8 – 23
1P6–E4617–01	4 – 6
	8 – 26
1P6–E4711–00	8 – 1
1P6–E4718–00	8 – 4
1P6–E4728–00	8 – 8
1P6–E4733–00	8 – 22
1P6–E4738–00	8 – 12
1P6–E4758–00	8 – 16
1P6–E4766–00	8 – 7
	8 – 11
1P6–E479H–00	8 – 20
1P6–E479J–00	8 – 21
1P6–E5100–10	9 – 1
1P6–E5113–00	10 – 13
1P6–E531A–00	9 – 4
1P6–E5362–00	10 – 21
1P6–E5371–10	9 – 3
1P6–E5411–10	10 – 1
1P6–E5418–00	10 – 14
1P6–E5421–10	10 – 16
1P6–E5431–00	10 – 26
1P6–E5436–01	10 – 23
1P6–E5451–00	10 – 2
1P6–E5461–00	10 – 17
1P6–E5484–01	10 – 5
1P6–E5512–10	11 – 1
1P6–E5644–00	11 – 4
1P6–E6111–10	12 – 2
1P6–E6116–00	12 – 1
1P6–E6125–00	12 – 22
1P6–E6152–00	12 – 21
1P6–E6170–00	12 – 16
1P6–E6311–00	12 – 4
1P6–E6324–00	12 – 7
1P6–E6325–00	12 – 9
1P6–E6326–00	12 – 10
1P6–E6330–00	12 – 8
1P6–E6346–00	14 – 8
1P6–E6377–00	12 – 17
1P6–E6378–00	12 – 18
1P6–E6551–00	12 – 19
1P6–E6552–00	12 – 20
1P6–E6571–01	12 – 6
1P6–E6818–01	12 – 5

PART NO.	REF. NO.
1P6–E6819–00	12 – 11
1P6–E6821–00	12 – 12
1P6–E6822–10	12 – 13
1P6–E7121–10	13 – 5
1P6–E7131–10	13 – 2
1P6–E7211–10	13 – 13
1P6–E7217–00	13 – 4
1P6–E7221–10	13 – 9
1P6–E7231–10	13 – 12
1P6–E7411–01	13 – 1
1P6–E7421–01	13 – 8
1P6–E7466–00	10 – 4
1P6–E7648–00	13 – 3
1P6–E7658–00	13 – 10
1P6–E8101–11	15 – 1
1P6–E8110–01	15 – 18
1KL–E8113–00	15 – 19
1P6–E8127–00	14 – 2
1P6–E8137–01	14 – 3
1P6–E8140–00	14 – 4
1P6–E8183–00	15 – 17
1P6–E8184–00	15 – 16
1P6–E8186–01	15 – 9
1P6–E8337–00	14 – 7
1P6–E8511–10	14 – 10
1P6–E8512–10	14 – 11
1P6–E8531–00	14 – 9
1P6–F1110–40	16 – 1
1P6–F117F–10	16 – 10
1P6–F137A–00	22 – 11
1P6–F137B–00	22 – 15
1P6–F1387–10	16 – 8
1P6–F1511–00	17 – 1
1P6–F151A–40	17 – 6
1P6–F1569–00	17 – 5
1P6–F160E–00	17 – 10
1P6–F1611–00	17 – 7
1P6–F163G–00	17 – 13
1P6–F1711–00	18 – 1
1P6–F1717–00	18 – 5
1P6–F1721–00	18 – 2
1P6–F172W–00	18 – 8
1P6–F1783–00	18 – 9
1P6–F1826–10	22 – 7
1P6–F2110–00	19 – 1
1P6–F2123–00	19 – 2
1P6–F2151–00	19 – 3
1P6–F218G–00	19 – 11

PART NO.	REF. NO.
1P6–F2199–00	19 – 7
1P6–F2210–01	19 – 12
1P6–F2311–00	19 – 10
1P6–F3100–00	21 – 1
1P6–F3118–00	21 – 5
1P6–F315H–00	21 – 8
1P6–F315J–00	21 – 11
5VL–F3165–01	20 – 13
1P6–F3340–00	21 – 2
1P6–F3350–00	21 – 3
1P6–F3390–00	21 – 4
4RT–F3411–00	20 – 3
4FP–F3411–10	21 – 7
1KL–F3412–00	20 – 1
4RT–F3412–00	20 – 4
1P6–F3416–00	20 – 6
1P6–F3418–01	20 – 10
1P6–F341E–00	20 – 5
5VL–F341E–00	20 – 2
1P6–F3430–10	20 – 11
1P6–F3462–00	21 – 6
1P6–F3857–00	21 – 12
1P6–F4116–01	22 – 23
1P6–F4173–00	22 – 25
1P6–F4181–00	22 – 9
1P6–F4244–50	22 – 26
1P6–F4246–50	22 – 27
1P6–F470F–00	23 – 2
1P6–F4770–00	23 – 1
1P6–F5104–01	24 – 18
	25 – 18
1P6–F5111–00	24 – 1
1P6–F5121–00	24 – 5
	25 – 5
1P6–F5151–01	24 – 8
	25 – 8
1P6–F5155–01	24 – 9
	25 – 9
1P6–F5181–01	24 – 19
1P6–F5311–00	25 – 1
1P6–F533A–01	24 – 10
	25 – 10
1P6–F5381–01	25 – 24
1P6–F538G–11	25 – 28
1P6–F5437–11	25 – 19
1P6–F6111–00	26 – 1
1P6–F6124–00	26 – 14
1P6–F6240–10	26 – 4

PART NO.	REF. NO.
1P6–F6241–00	26 – 3
1P6–F6302–00	26 – 5
1P6–F6314–01	26 – 11
1P6–F6331–02	26 – 8
1P6–F6341–01	26 – 9
1P6–F6372–00	26 – 10
1P6–F7211–01	27 – 1
1P6–F7231–01	27 – 5
1P6–F7311–00	27 – 18
1P6–F7313–01	27 – 22
1P6–F7411–00	27 – 12
1P6–F7451–01	27 – 13
1P6–F7456–01	27 – 17
1P6–F7461–01	27 – 14
1P6–H1410–01	28 – 1
1P6–H1450–01	28 – 2
4RT–H1801–00	29 – 2
5WV–H1828–00	29 – 5
1P6–H183G–00	29 – 6
1P6–H1890–00	29 – 1
4GU–H1960–00	31 – 14
1P6–H2129–00	18 – 6
1P6–H2131–00	31 – 19
1P6–H2151–00	31 – 22
1P6–H2310–00	31 – 1
1P6–H2510–11	31 – 16
12B–H252U–00	31 – 12
1P6–H252U–00	31 – 21
5VL–H2540–11	31 – 6
1P6–H2579–00	31 – 17
1P6–H2590–00	31 – 8
1P6–H259E–20	30 – 1
1P6–H3922–00	30 – 3
4TU–H3936–00	30 – 8
4TU–H3936–10	26 – 15
1P6–H3976–11	30 – 9
1P6–H5540–00	31 – 4
1P6–H5546–00	31 – 5
1P6–W1102–00	1 – 1
1P6–W1140–10	2 – 1
1P6–W1854–00	14 – 1
1P6–W253A–00	24 – 6
	25 – 6
1P6–Y1161–00	2 – 11
5VL–Y1215–00	3 – 8
90101–06278	24 – 11
	25 – 11
90101–08820	4 – 7

PART NO.	REF. NO.
90101–10003	27 – 19
90105–05002	21 – 13
90105–065A1	9 – 6
	10 – 8
90105–08097	16 – 2
90105–10063	19 – 4
90105–10122	19 – 13
90105–10123	16 – 5
90110–06829	4 – 4
90111–08024	25 – 20
90116–08809	9 – 10
90119–06044	6 – 17
90149–06011	22 – 6
90155–06801	5 – 6
90157–05801	30 – 4
90157–05803	30 – 6
90159–06022	18 – 7
90159–06182	22 – 13
	22 – 17
90159–06830	17 – 8
	18 – 3
90170–06809	25 – 30
90170–08803	15 – 10
90175–06013	27 – 10
90176–08026	1 – 11
90176–22801	20 – 12
90179–06826	26 – 12
90179–14802	12 – 14
90179–22801	20 – 9
90179–25864	20 – 7
90183–06023	17 – 12
90185–10037	19 – 6
	27 – 20
90201–05809	8 – 15
	8 – 19
90201–05810	12 – 24
90201–06072	22 – 22
90201–06861	25 – 29
90201–07803	5 – 4
90201–08759	19 – 5
90201–088C3	1 – 10
90201–100S7	20 – 15
90201–10774	19 – 14
90201–10823	14 – 6
90201–12190	24 – 20
	25 – 26
90201–12818	28 – 6
90201–128C9	15 – 7

PART NO.	REF. NO.
90201–15700	13 – 14
90201–17801	12 – 3
90202–05193	22 – 5
90202–26142	20 – 8
90208–14033	12 – 15
90240–06805	27 – 6
90240–10002	27 – 15
90249–12808	26 – 13
	27 – 9
90269–07076	22 – 14
	22 – 18
90280–03017	2 – 7
90338–16802	16 – 13
90338–26802	10 – 28
90340–12097	5 – 7
90340–14818	10 – 9
90340–32813	10 – 11
90387–06859	23 – 4
90387–07804	22 – 21
90387–07805	22 – 12
	22 – 16
90387–07808	17 – 9
	18 – 4
90387–07818	17 – 3
	19 – 9
	21 – 10
90387–12830	24 – 2
90387–12832	25 – 2
90387–12833	24 – 22
90387–12834	25 – 27
90387–167L5	4 – 2
90430–06817	4 – 14
90430–10188	31 – 7
90430–12227	5 – 8
90464–20818	31 – 11
90464–35803	31 – 10
90465–08803	10 – 25
90467–09854	9 – 5
	22 – 10
90467–10008	6 – 16
90480–16185	17 – 4
90480–18803	22 – 20
90501–02639	11 – 8
90501–10806	27 – 11
90506–25802	27 – 21
90508–29007	15 – 4
90508–40805	27 – 2
90520–20807	16 – 12

PART NO.	REF. NO.
91312–06012	11 – 9
91312–06016	4 – 11
	4 – 15
	28 – 4
91312–06025	28 – 3
91317–06020	6 – 4
91317–06030	6 – 5
91402–20020	27 – 3
91402–25015	27 – 8
	27 – 16
92902–12600	27 – 4
92907–05600	8 – 6
	8 – 10
92907–06600	8 – 14
	8 – 18
92907–08200	16 – 3
92907–10200	16 – 6
9290N–06600	27 – 7
9290N–08600	15 – 11
93102–12806	15 – 3
93102–20802	13 – 18
93104–12800	24 – 13
	25 – 13
93106–20811	24 – 4
	25 – 4
93210–06810	26 – 7
93210–08810	15 – 12
93210–09802	1 – 3
93210–14899	10 – 10
93210–19809	10 – 22
93210–22803	6 – 3
93210–23614	29 – 3
93210–328A4	10 – 12
93210–44678	29 – 4
93210–44889	1 – 9
93210–628B6	1 – 6
93306–001X3	13 – 7
93306–201X1	24 – 3
	25 – 3
93306–203YT	13 – 6
93306–204YD	13 – 17
93306–205YP	2 – 6
93306–252Y6	13 – 16
93306–900Y0	12 – 23
93310–3230E	2 – 3
93317–11287	15 – 2
93410–20809	13 – 11
	13 – 20

PART NO.	REF. NO.
93430–05823	5 – 3
93440–15802	13 – 15
93608–43800	11 – 2
93610–10174	11 – 7
93812–13812	13 – 19
94125–10800	24 – 14
	25 – 14
94225–10800	24 – 15
	25 – 15
94325–10800	24 – 16
	25 – 16
94414–10800	24 – 17
	25 – 17
94568–A1080	25 – 22
94591–51084	4 – 8
94668–A1001	25 – 23
94701–00878	1 – 12
95022–06020	31 – 2
95022–06025	10 – 15
95027–06010	8 – 3
95027–06012	21 – 9
95027–06016	1 – 7
95027–06040	9 – 8
	10 – 6
	10 – 19
95027–06050	10 – 7
	10 – 20
95027–06060	9 – 7
95027–06085	1 – 15
95302–05700	30 – 7
95307–06600	24 – 12
	25 – 12
	25 – 31
95312–12600	28 – 5
95602–05100	30 – 5
95602–08200	16 – 4
95602–10200	16 – 7
	26 – 2
95602–12200	24 – 21
	25 – 25
95607–08200	25 – 21
95607–10100	19 – 15
95702–06500	8 – 24
95802–06012	17 – 2
	19 – 8
95807–06030	22 – 19
95812–08016	16 – 9
95812–08020	27 – 23

PART NO.	REF. NO.
95812–08030	8 – 25
95822–08016	10 – 24
95827–10030	20 – 14
97027–06020	15 – 20
97502–05510	26 – 6
97502–06514	17 – 11
	31 – 9
	31 – 15
97502–06520	23 – 3
97602–05225	6 – 14
97607–04114	7 – 19
97707–50516	16 – 11
98502–05035	30 – 2
98507–04006	7 – 26
98507–05008	8 – 5
	8 – 9
	10 – 27
98507–06010	8 – 13
	8 – 17
98512–05012	12 – 25
98902–06010	22 – 24
99009–10400	14 – 5
99009–12400	15 – 8
99530–10114	1 – 14
	9 – 2
	9 – 9
	10 – 3
	10 – 18

PART NO.	REF. NO.